can-am®

BRP

2016 Operator's Guide

Includes Safety, Vehicle and Maintenance Information

COMMANDER™ Series

⚠ WARNING

Read this guide thoroughly. It contains important safety information.
Minimum age: Operator: 16 or older with a valid driver's license. Keep this Operator's Guide in the vehicle.

219 001 643

Original Instructions

⚠ WARNING

YOUR VEHICLE CAN BE HAZARDOUS TO OPERATE. A collision or rollover can occur quickly, if you fail to take proper precautions, even during routine maneuvers such as turning and driving on hills or over obstacles.
For your safety, understand and follow all the warnings contained in this Operator's Guide and on the labels on your vehicle. **Failure to follow these warnings can result in SEVERE INJURY OR DEATH!**
Keep this Operator's Guide with the vehicle at all times.

⚠ WARNING

Disregarding any of the safety precautions and instructions contained in this Operator's Guide, *SAFETY DVD* video and on-product safety labels could result in severe injury including the possibility of death!

⚠ WARNING

This vehicle may exceed the performance of other vehicles you may have ridden in the past. Take time to familiarize yourself with your new vehicle.

CALIFORNIA PROPOSITION 65 WARNING

⚠ WARNING

This vehicle contains or emits chemicals known to the state of California to cause cancer and birth defects or other reproductive harm.

In Canada, products are distributed by Bombardier Recreational Products Inc. (BRP).

In USA, products are distributed by BRP US Inc.

The following trademarks are the property of Bombardier Recreational Products Inc.:

ACS™ Can-Am® Commander™ D.E.S.S.™ DPS™ Rotax® TTI™ XPS™

This document contains the trademark of the following company:

- Garmin®, Garmin logo, City Navigator® and MapSource™ are trademarks of Garmin Ltd or its subsidiaries.
- MicroSD™ and SD™ are trademarks of SanDisk or its subsidiaries.
- † Mossy Oak is a trademark of Haas Outdoors, Inc.
- VELCRO® is a registered trademark of Velcro Industries B. V
- † Visco-Lok is a trademark of GKN Viscodrive GmbH.

tmo2016-022 en JT
®™ and the BRP logo are trademarks of Bombardier Recreational Products Inc. or its affiliates.
©2015 Bombardier Recreational Products Inc. and BRP US Inc. All rights reserved.

FOREWORD

Deutsch	Dieses Handbuch ist möglicherweise in Ihrer Landessprache verfügbar. Bitte wenden Sie sich an Ihren Händler oder besuchen Sie: **www.operatorsguide.brp.com**.
English	This guide may be available in your language. Check with your dealer or go to: **www.operatorsguide.brp.com**.
Español	Es posible que este manual esté disponible en su idioma. Consulte a su distribuidor o visite: **www.operatorsguide.brp.com**.
Français	Ce guide peut être disponible dans votre langue. Vérifier avec votre concessionnaire ou aller à: **www.operatorsguide.brp.com**.
日本語	このガイドは、言語によって翻訳版が用意されています。. ディーラーに問い合わせるか、次のアドレスでご確認ください： **www.operatorsguide.brp.com.**
Nederlands	Deze handleiding kan beschikbaar zijn in uw taal. Vraag het aan uw dealer of ga naar: **www.operatorsguide.brp.com**.
Norsk	Denne boken kan finnes tilgjengelig på ditt eget språk. Kontakt din forhandler eller gå til: **www.operatorsguide.brp.com**.
Português	Este manual pode estar disponível em seu idioma. Fale com sua concessionária ou visite o site: **www.operatorsguide.brp.com**.
Suomi	Käyttöohjekirja voi olla saatavissa omalla kielelläsi. Tarkista jälleenmyyjältä tai käy osoitteessa: **www.operatorsguide.brp.com**
Svenska	Denna bok kan finnas tillgänglig på ditt språk. Kontakta din återförsäljare eller gå till: **www.operatorsguide.brp.com**.

Congratulations on your purchase of a new Can-Am® side-by-side vehicle. It's backed by the BRP limited warranty and a network of authorized Can-Am dealers ready to provide the parts, accessories or service you may require.

At delivery, you were informed of the warranty coverage and signed the *PREDELIVERY CHECK LIST* to ensure your new vehicle was prepared to your entire satisfaction.

Your dealer is committed to your satisfaction. If you need more information, please ask your dealer.

Know Before you Go

To learn how to reduce the risk of accident for you or bystanders, read this Operator's Guide before you operate the vehicle.

Also, read all safety labels on your vehicle and watch the *SAFETY DVD* video.

Failure to follow the warnings contained in this Operator's Guide can result in SERIOUS INJURY or DEATH.

Safety Messages

The types of safety messages, what they look like and how they are used in this guide are explained as follows:

The safety alert symbol ⚠ indicates a potential injury hazard.

⚠ WARNING

Indicates a potential hazard which, if not avoided, could result in serious injury or death.

CAUTION Indicates a hazardous situation which, if not avoided, could result in minor or moderate injury.

NOTICE Indicates an instruction which, if not followed, could result in severely damaged vehicle components or other property.

About this Operator's Guide

This Operator's Guide has been prepared to acquaint the owner/operator of a new vehicle with the various vehicle controls, maintenance and safe operating instructions. It is indispensable for the proper use of the product.

Keep this Operator's Guide in the vehicle as you can refer to it for things such as maintenance, troubleshooting and instructing others.

Note that this guide is available in several languages. In the event of any discrepancy, the English version shall prevail.

If you want to view and/or print an extra copy of your Operator's Guide, simply visit the following website **www.operatorsguide.brp.com**.

The information contained in this document is correct at the time of publication. BRP, however, maintains a policy of continuous improvement of its products without imposing upon itself any obligation to install them on products previously manufactured. Due to late changes, some differences between the manufactured product and the descriptions and/or specifications in this guide may occur. BRP reserves the right at any time to discontinue or change specifications, designs, features, models or equipment without incurring any obligation upon itself.

This Operator's Guide and the *SAFETY DVD* video should remain with the vehicle when it is sold.

TABLE OF CONTENTS

FOREWORD **1**
Know Before you Go 1
Safety Messages 1
About this Operator's Guide 2

SAFETY INFORMATION

GENERAL PRECAUTIONS **10**
Avoid Carbon Monoxide Poisoning 10
Avoid Gasoline Fires and Other Hazards 10
Avoid Burns from Hot Parts 10
Accessories and Modifications 10
SAFE OPERATION - RESPONSIBILITIES **11**
Owner - Be Responsible 11
Operator - Be Qualified and Responsible 11
Riding Carefully 12
Occupant Restraint System 12
Terrain Condition 12
PRE-RIDE INSPECTION **14**
Pre-Ride Inspection Check List 14
PREPARE TO RIDE **17**
Before you Ride 17
Riding Gear 17
AVOID ACCIDENTS **19**
Avoid Rollovers and Tipovers 19
Avoid Collisions 20
RIDING YOUR VEHICLE **21**
Practice Exercises 21
Off-Road Operation 22
General Riding Techniques 22
MOVING LOADS AND DOING WORK **27**
Working with your Vehicle 27
Carrying Loads 27
Hauling a Load 30
Pulling a Trailer 30
IMPORTANT ON-PRODUCT LABELS **32**
Hang Tag 32
Safety Labels 33
Compliance Labels 40

VEHICLE INFORMATION

PRIMARY CONTROLS **44**
1) Steering Wheel 44

PRIMARY CONTROLS (cont'd)
2) Accelerator Pedal 45
3) Brake Pedal 45
4) Shift Lever 45

SECONDARY CONTROLS 47
1) Ignition Switch and Keys 47
2) Engine Start Button 49
3) Low/High Beam Headlight Switch 49
4) 2WD/4WD Switch 49
5) Sport/ECO Mode Switch 50
6) ACS Switch (LTD Models Only) 50
7) Winch Switch (Models with Winch) 50
8) Override Switch 51
9) DPS Switch (All Models Except Base) 51

MULTIFUNCTION GAUGE (LCD) (BASE AND DPS MODELS) 52
Multifunction Gauge Description 52
Multifunction Gauge Modes 53
Navigating in the LCD Gauge 56
Gauge Setup 56

MULTIFUNCTION GAUGE (ANALOG/DIGITAL) (XT, XT-P AND LTD MODELS) 58
Multifunction Gauge Description 58
Gauge Setup 62

EQUIPMENT 63
1) Tilt Steering 65
2) Cup Holders 66
3) Passenger Handholds 66
4) Glove Box 66
5) Tool Kit 66
6) Footrests 66
7) Side Nets 67
8) Shoulder Guards 67
9) Seat Belts 67
10) Driver's Seat 68
11) Passenger Seat 69
12) Fuel Reservoir Cap 69
13) Winch (Models with Winch) 69
14) Cargo Box 69
15) Cargo Box Tilt Release Handles 70
16) Anchoring Hooks 70
17) Upper Tailgate 71
18) Lower Tailgate 71
19) Hitch support 71
20) 12-Volt Power Outlet 72
21) ACS Compressor (LTD Models Only) 72
22) Radio (LTD Models Only) 73
23) Radio AUX Output (LTD Models Only) 73

EQUIPMENT (cont'd)
24) GPS Receiver (Global Positioning System) (LTD Models Only) 73
25) Rear Net (LTD Models Only) 74
26) Half Windshield (LTD and Mossy Oak Models Only) 75
27) Full Roof (LTD and Mossy Oak Models Only) 76

EQUIPMENT (IF AVAILABLE ON YOUR MODEL) **78**
1) Full Underbody Aluminum Skid Plate 78
2) Gear Rail 78
3) Gun Boot 78
4) Gun Boot Mount 80

TUNE YOUR RIDE **82**
Suspension Adjustment Guidelines 82
Suspension Factory Settings 82
Suspension Adjustments 83
Shock Air Pressure Adjustment (LTD Models Only) 85
DPS Function 89

FUEL **90**
Fuel Requirements 90
Vehicle Fueling Procedure 90
Fueling a Gasoline Container 91

BREAK-IN PERIOD **92**
Operation During Break-In 92

BASIC PROCEDURES **93**
Starting the Engine 93
Shifting the Transmission 93
Choosing the Correct Range (Low or High) 93
Stopping the Engine and Parking the Vehicle 94
Tips for Maximizing Drive Belt Durability 94

SPECIAL PROCEDURES **95**
What to do if Water is Suspected to be in the CVT 95
What to do if Battery is Drained out 95
What to do if Vehicle Rolled Over 95
What to do if Vehicle is Submerged 95

TRANSPORTING THE VEHICLE **96**

LIFTING AND SUPPORTING THE VEHICLE **97**
Front of Vehicle 97
Rear of Vehicle 97

MAINTENANCE

MAINTENANCE SCHEDULE **100**
SEVERE DUSTY CONDITIONS 100
MAINTENANCE SCHEDULE LEGEND 100
MAINTENANCE SCHEDULE 101

MAINTENANCE PROCEDURES **104**
Engine Air Filter 104
Front Grill Kit 106
CVT Air Filter 107
Engine Oil 108
Oil Filter 109
Radiator 110
Engine Coolant 111
Muffler Spark Arrester 115
Gearbox Oil 116
Spark Plugs 117
CVT Cover 118
CVT Cover Installation 119
Drive Belt 119
Exhaust Area 120
Battery 121
Fuses 121
Lights 123
Drive Shaft Boot and Protector 124
Wheel Bearing 125
Wheels and Tires 125
Suspensions 128
Brakes 130
Seat Belts 130
VEHICLE CARE **132**
Post-Operation Care 132
Vehicle Cleaning and Protection 132
STORAGE AND PRESEASON PREPARATION **133**

TECHNICAL INFORMATION

VEHICLE IDENTIFICATION **136**
Vehicle Identification Number 136
Engine Identification Number 136
NOISE EMISSION CONTROL SYSTEM REGULATION **137**
EC-DECLARATION OF CONFORMITY **138**
SPECIFICATIONS **139**

TROUBLESHOOTING

TROUBLESHOOTING GUIDELINES **148**
MESSAGES IN MULTIFUNCTION GAUGE **152**

WARRANTY

BRP LIMITED WARRANTY USA AND CANADA: 2016 CAN-AM® SSV.... 154
US EPA EMISSION-RELATED WARRANTY 158
BRP INTERNATIONAL LIMITED WARRANTY: 2016 CAN-AM® SSV 161
BRP LIMITED WARRANTY FOR THE EUROPEAN ECONOMIC AREA, THE COMMONWEALTH OF THE INDEPENDANT STATES AND TURKEY: 2016 CAN-AM® SSV 165

CUSTOMER INFORMATION

PRIVACY INFORMATION 172
CHANGE OF ADDRESS/OWNERSHIP..... 173

SAFETY INFORMATION

GENERAL PRECAUTIONS

Avoid Carbon Monoxide Poisoning

All engine exhaust contains carbon monoxide, a deadly gas. Breathing carbon monoxide can cause headaches, dizziness, drowsiness, nausea, confusion and eventually death.

Carbon monoxide is a colorless, odorless, tasteless gas that may be present even if you do not see or smell any engine exhaust. Deadly levels of carbon monoxide can collect rapidly, and you can quickly be overcome and unable to save yourself. Also, deadly levels of carbon monoxide can linger for hours or days in enclosed or poorly ventilated areas. If you experience any symptoms of carbon monoxide poisoning, leave the area immediately, get fresh air and seek medical treatment.

To prevent serious injury or death from carbon monoxide:

- Never run the vehicle in poorly ventilated or partially enclosed areas such as garages, carports or barns. Even if you try to ventilate engine exhaust with fans or open windows and doors, carbon monoxide can rapidly reach dangerous levels.
- Never run the vehicle outdoors where engine exhaust can be drawn into a building through openings such as windows and doors.

Avoid Gasoline Fires and Other Hazards

Gasoline is extremely flammable and highly explosive. Fuel vapors can spread and be ignited by a spark or flame many feet away from the engine. To reduce the risk of fire or explosion, follow these instructions:

- Use only an approved gasoline container to store fuel.
- Never fill the gasoline container in the vehicle cargo box or on the vehicle - an electrical static discharge may ignite the fuel.
- Strictly adhere to instructions in *FUELING PROCEDURE*.
- Never start or operate the engine if the fuel cap is not properly installed.

Gasoline is poisonous and can cause injury or death.

- Never siphon gasoline by mouth.
- If you swallow gasoline, get any in your eye(s), or inhale gasoline vapor, see a doctor immediately.

If gasoline spills on you, wash with soap and water and change your clothes.

Avoid Burns from Hot Parts

Certain components become hot during operation. Avoid contact with those parts during and shortly after operation to avoid burns.

Accessories and Modifications

Do not make unauthorized modifications, or use attachments or accessories that are not approved by BRP. Since these changes have not been tested by BRP, they may increase the risk of crash or injury, and can render the vehicle illegal. For example, modifications such as different tires can affect the handling and increase the risk of crash.

See your authorized Can-Am dealer for available accessories for your vehicle.

SAFE OPERATION - RESPONSIBILITIES

This is a high performance off-road vehicle. Operators must be responsible and use care to avoid rollovers, tipovers, collisions, and other accidents. Even with vehicle safety features (such as protective structure, seat belts, side nets) and protective gear (such as a helmet), there is always a risk of injury or death in these accidents. To reduce the risk of serious injury or death, follow the rules in this section.

Owner - Be Responsible

Read this Operator's Guide and watch the *SAFETY DVD* video.

Always inspect and confirm the safe operating condition of your vehicle prior to ride. Always follow the maintenance schedule described in this Operator's Guide.

Never allow anyone to operate your vehicle unless they are responsible and can be trusted with a high performance vehicle. Consider supervising new or young operators and setting rules and limits (e.g., whether they can carry a passenger, what they may do with the vehicle, where they may ride, etc.) for anyone using your vehicle.

Select the appropriate key (see *IGNITION SWITCH AND KEYS*) based on the operator's experience, vehicle use and environment.

Discuss the safety information with anyone who will be using the vehicle. Be sure that all operators and passengers meet the qualifications below and agree to follow the safety information. Help users become familiar with the vehicle.

We encourage you to have an Annual Safety Inspection of your vehicle. Please contact an authorized BRP dealer for further details. Though not required, it is recommended that an authorized BRP dealer performs the preseason preparation of your vehicle. Each visit to your authorized BRP dealer is a great opportunity for your dealer to verify if your vehicle is included in any safety campaign. We also urge you to visit your authorized BRP dealer in a timely manner if you become aware of any safety related campaigns.

See an authorized BRP dealer for available accessories you may require.

Operator - Be Qualified and Responsible

Read this Operator's Guide and watch the *SAFETY DVD* video.

Become completely familiar with the operational controls and the general operation of the vehicle.

Take a training course if available (contact an authorized Can-Am dealer to find out about training course availability as well as on the internet at http://www.rohva.org/), and perform the practice exercises in *PRACTICE EXERCISES* section. Practice driving in a suitable area free of hazards and feel the response of each control. Drive at low speeds. Higher speeds require greater experience, knowledge and suitable riding conditions.

Be at least 16 years of age.

Be tall enough to be properly seated: back against the backrest with the seat belt fastened, to hold the steering wheel with both hands and still be able to reach the full stroke of brake and accelerator pedals with the right foot and to firmly plant left foot on the footrest.

Have a proper driver's license in accordance with local laws.

Never use this vehicle with drugs or alcohol, or if tired or ill. These slow reaction time and impair judgment.

Carrying Passenger

Only carry one passenger. The passenger must be properly seated in the cockpit.

The passenger must be tall enough to always be properly seated: back against the backrest with seat belt fastened, holding both handholds, and feet firmly planted - right foot on the footrest and the left foot on the vehicle floor.

Never carry a passenger who has used drugs or alcohol, or is tired or ill. These slow reaction time and impair judgment.

Instruct the passenger to read the vehicle's safety labels.

Never carry a passenger if you judge his ability or judgement insufficient to concentrate on the terrain conditions and adapt accordingly. More specifically for side-by-side vehicles, the passenger must also pay constant attention to the terrain ahead and be able to brace for bumps.

Riding Carefully

- This vehicle handles differently from other vehicles. A collision or rollover can occur quickly, during abrupt maneuvers such as doing sharp turns, acceleration or deceleration and driving on hills or over obstacles, if you fail to take proper precautions.
- Never operate at excessive speeds. Always go at a speed that is proper for the terrain, visibility, and operating conditions, and your experience.
- Never attempt jumps, side slides, donuts or any other stunts.
- Never attempt rapid acceleration or deceleration when performing a sharp turn. This may result in a roll over.
- Never attempt skidding or sliding. If vehicle starts to skid or slide, counter steer in the direction of skidding or sliding. On extremely slippery surfaces, such as ice, go slowly and be very cautious in order to reduce the chance of skidding out of control.
- Always be sure there are no obstacles or people behind the vehicle when you operate in reverse. Pay attention to blind spots. When it is safe to proceed in reverse, go slowly.
- Never exceed the stated load limits for this vehicle. Cargo must be properly secured. Reduce speed, allow for greater braking distance and follow other instructions in *MOVING LOADS AND DOING WORK* subsection.
- Always remember that this vehicle is heavy! Its pure weight alone may entrap you should it tip or rollover.

Occupant Restraint System

- This vehicle is designed to carry one driver and one passenger, both wearing proper protective gears (refer to *RIDING GEAR* in this section).
- The driver and passenger must latch the side nets and wear the seat belts at all times when riding.

Terrain Condition

- This vehicle is not designed to ride on paved surfaces; if you must shortly use the vehicle on such surfaces, avoid abrupt inputs to steering wheel, accelerator and brake pedals.
- Always go slowly and be extra careful when operating on unfamiliar terrain. Always be alert to changing terrain conditions when operating this vehicle. Take the time to learn how the vehicle performs in different environments.
- Never operate on excessively rough, slippery or loose terrain until you have learned and practiced the skills necessary to control this vehicle on such terrain. Always be especially cautious on these kinds of terrain.

- Never operate this vehicle on hills too steep for the vehicle or your abilities. Practice on small inclines.
- Always follow proper procedures for climbing or going down hills as described in *RIDING YOUR VEHICLE* subsection. Check the terrain carefully before you start up or down any hill. Never climb or descend hills with excessively slippery or loose surfaces. Never go over the top of any hill at high speed.
- Never attempt steep hills or side hilling when pulling a trailer.
- Always check for obstacles before operating in a new area. Always follow proper procedures when operating over obstacles as described in *RIDING YOUR VEHICLE* subsection.
- Never operate this vehicle in fast flowing water or in water deeper than specified in *RIDING YOUR VEHICLE* subsection. Remember that wet brakes may have reduced stopping ability. Test your brakes after leaving water. If necessary, apply them several times to let friction dry out the brakes.
- Always ensure to properly park the vehicle on the flattest terrain section available. Put shift lever in PARK, stop engine and remove key before leaving the vehicle.
- Never assume that the vehicle will go everywhere safely. Sudden changes in terrain caused by holes, depressions, banks, softer or harder "ground" or other irregularities may cause the vehicle to topple or become unstable. To avoid this, slow down and always observe the terrain ahead. If the vehicle does begin to topple or rollover, the best advice is to immediately steer in the direction of the rollover! Never attempt to prevent a rollover with your arms or legs. You should keep your limbs inside the cage.

PRE-RIDE INSPECTION

Always inspect and confirm the safe operating condition of your vehicle prior to ride. Always follow the maintenance schedule described in this Operator's Guide.

⚠ WARNING

Perform a pre-ride inspection before each ride to detect any potential problem that could occur during operation. The pre-ride inspection can help you monitor component wear and deterioration before they become a problem. Correct any problem that you discover to reduce the risk of a breakdown or crash.

Before using this vehicle, the operator should always perform the following pre-ride inspection check list.

Pre-Ride Inspection Check List

What to Do Before Starting the Engine (Key OFF)

ITEMS TO BE INSPECTED	INSPECTION TO PERFORM	✔
Tires	Check tire pressure and condition. – Front: MIN 69 kPa (10 PSI), LOADED 83 kPa (12 PSI) – Rear: MIN 83 kPa (12 PSI), LOADED 152 kPa (22 PSI)	
Wheels	Check wheels for damage and for abnormal play, and check lug nuts are tightened. Tighten wheel beadlock bolts (if equipped).	
Radiator	Check cleanliness of the radiator.	
Front grill kit	Inspect front grill kit for cleanliness.	
Engine oil	Check engine oil level.	
Coolant	Check coolant level.	
Brake fluid	Check brake fluid level.	
Engine air filter	Inspect the engine air filter, replace if needed (service more often when riding in dusty conditions).	
CVT air filter	Inspect and clean the CVT air filter (when riding in dusty conditions).	
Drive shaft boots	Check drive shaft boots and protectors condition.	

ITEMS TO BE INSPECTED	INSPECTION TO PERFORM	✔
Cargo and load	**Cargo Load:** If you transport a cargo, respect the maximum loading capacity of 272 kg (600 lb). Ensure cargo is properly secured to the rear cargo box. **Vehicle Load:** Ensure that total load on the vehicle (including operator, passenger, cargo, tongue weight and added accessories) does not exceed 363 kg (800 lb) (all models except LTD and Mossy Oak† Hunting Edition), 340 kg (750 lb) (LTD model) and 321 kg (707 lb) (Mossy Oak Hunting Edition).	
	If you are pulling a trailer or another equipment: – Check hitch and trailer ball condition. – Respect the tongue capacity and towing capacity. – Ensure trailer is properly secured to hitch.	
Rear cargo box	Check if the cargo box is properly latched.	
	Check if both tail gates are properly latched.	
Chassis and suspension	Check underneath vehicle for any debris on chassis or suspension and clean them properly.	

What to Do Before Starting the Engine (Key ON)

ITEMS TO BE INSPECTED	INSPECTION TO PERFORM	✔
Gauge	Check operation of indicator lamps in gauge (during first few seconds of key ON).	
	Check for messages in gauge.	
Lights	Check operation and cleanliness of headlights and taillight.	
	Check operation of high and low beam.	
	Check operation of brake light.	
Seats, side nets and seat belts	Check if seats are properly latched.	
	Check side nets for any damage. Have the nets replaced if any damage is found. Fasten both side nets and confirm that they latch securely. Use the adjustment strap to tighten the net as required.	
	Check seat belts for any damage. Fasten seat belts and confirm that they latch securely.	

ITEMS TO BE INSPECTED	INSPECTION TO PERFORM	✔
Accelerator pedal	Press on the accelerator pedal a few times to ensure it operates freely and it returns to the rest position when released.	
Brake pedal	Press down on the brake pedal and make sure you feel firm resistance and that it fully returns to position when released.	
Fuel level	Check the fuel level.	

What to Do After the Engine is Started

ITEMS TO BE INSPECTED	INSPECTION TO PERFORM	✔
Steering	Check if steering operates freely by completely turning it from side to side.	
Ignition switch	Turn the ignition switch to OFF to verify if engine will shut down. Restart engine.	
Shift lever	Check operation of shift lever (P, R, N, H and L).	
2WD/4WD selector	Check operation of 2WD/4WD selector.	
Brakes	Drive forward slowly a few feet and apply brakes. The brake pedal must feel firm when applied. The pedal must return to rest position when released. The brakes must respond adequately to the driver's input.	

Before you Ride

Perform pre-ride inspection to confirm the safe operating condition of your vehicle. Refer to *PRE-RIDE INSPECTION* subsection.

Driver and passenger must:

- Be properly seated.
- Latch both side nets and fasten seat belt.
- Wear appropriate riding gear. (Refer to *RIDING GEAR* subsection below.)

Riding Gear

It is important that the operator and passenger always wears appropriate protective clothing and apparel, including:

- An approved helmet
- Eye protection
- Boots
- Gloves
- A long sleeved shirt or jacket
- Long pants.

Depending on conditions, anti-fogging goggles may be required.

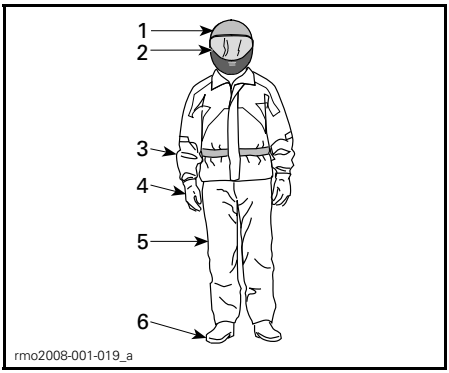

RIDING GEAR
1. *Approved helmet*
2. *Eye and face protection*
3. *Long sleeves shirt or jacket*
4. *Gloves*
5. *Long pants*
6. *Boots (over-the-ankle footwear)*

Weather conditions should help you decide how to dress. To maximize comfort and avoid frostbites in winter, dress for the coldest weather expected. Thermal underwear next to the skin also provides good insulation.

Never wear any loose clothing that may get entangled in the vehicle or on tree branches and shrubs.

Helmets and Eye Protection

Helmets protect the head and brain from injury. Even with the vehicle's cage and side nets, objects can enter the cockpit and strike the head, or the head can strike the cage itself or objects outside the vehicle. Even the best helmet is no guarantee against injury, but statistics indicate that helmet use significantly reduces the risk of brain injury. So, be safe and always wear a helmet while riding.

Choosing a Helmet

Helmets should be manufactured to meet the appropriate standard in your state, province or country and should fit properly.

A helmet with face protection is a better choice as it protects also against frontal impacts. It can also protect against debris, stones, insects, the elements, etc.

An open-face helmet does not offer the same protection for the face and chin. If you wear an open-face helmet, you should use a snap-on face shield and/or a pair of goggles. Ordinary glasses or sunglasses are not sufficient eye protection for riders. They can shatter or fly off, and they allow wind and airborne objects to reach the eyes.

For winter riding conditions, a stocking type cap, balaclava and face mask should always be carried or worn.

Use tinted face shields or goggles in the daytime only; do not use them at night or in poor illumination. Do not use them if they impair your ability to discern color.

Other Riding Gear

Footwear

Always wear closed toe footwear. Sturdy over-the-ankle boots with non-slip soles offer more protection and allow you to plant your foot properly on footrest.

Avoid long shoelaces that can be tangled in the accelerator or brake pedals.

For winter riding conditions, rubber soled boots with either a nylon or leather uppers, with removable felt liners are best suited.

Avoid rubber boots. Rubber boots may get trapped behind or between pedals, impairing the proper operation of brake and accelerator pedals.

Gloves

Full-fingered gloves protect hands from the wind, sun, heat, cold and flying objects. Gloves that fit snugly will improve grip on the steering wheel and help reduce hand fatigue. Sturdy, reinforced motorcycle or ATV gloves help protect hands better in the event of an accident or a rollover. If gloves are too bulky, it may be difficult to operate the controls.

For winter riding conditions, hands should be protected by a pair of snowmobile gloves which have sufficient insulation and allow use of thumbs and fingers for operation of controls.

Jackets, Pants and Riding Suits

Wear a jacket or a long sleeved shirt and long pants, or a full riding suit. Quality ATV-type protective gear will provide comfort, and it can help you avoid being distracted by adverse environmental elements. In case of a crash, good quality protective gear made of sturdy material may prevent or reduce injury.

In cool-weather riding, protect yourself against hypothermia. Hypothermia, a condition of low body temperature, can cause loss of concentration, slowed reactions and loss of smooth, precise muscle movement. In cool conditions, proper protective gear like a windproof jacket and insulated layers of clothing are essential. Even while riding at moderate temperatures, you can feel very cold due to the wind.

Protective gear that is appropriate for cold-weather riding may be too hot when stopped. Dress in layers so that clothing can be removed as desired. Topping the protective gear with a windproof outer layer can prevent cold air from reaching the skin.

Rain Gear

If you must ride in wet weather, a rain suit or a waterproof riding suit is recommended. On long rides, it is a good idea to carry rain gear. A dry rider will be much more comfortable and alert.

Hearing Protection

Long-term exposure to wind and engine noise when riding can cause permanent hearing loss. Properly worn hearing protective devices such as earplugs can help prevent hearing loss. Check local laws before using any hearing protective devices.

Avoid Rollovers and Tipovers

Side-by-side vehicles handle differently from other vehicles. Side-by-side vehicles are designed to handle off-road terrain (for example, their wheel base and track width, ground clearance, suspension, drivetrain, tires, etc.), and, as a result, can overturn in situations where vehicles designed for use primarily on paved or smooth terrain may not.

A rollover or other accident can occur quickly during abrupt maneuvers such as sharp turns or hard acceleration or deceleration when turning, or when driving on hills or over obstacles. Abrupt maneuvers or aggressive driving can cause rollovers or loss of control even in flat open areas. If the vehicle rolls over, any part of your body (such as arms, legs, or head) outside of the cockpit can be crushed and trapped by the cage or other parts of the vehicle. You can also be injured by impact with the ground, cockpit or other objects.

To reduce the risk of rollovers:

– Use care when turning.
  - Do not turn the steering wheel too far or too fast for your speed and environment. Adjust steering inputs according to your speed and environment.
  - Slow down before entering a turn. Avoid hard braking during a turn.
  - Avoid sudden or hard acceleration when turning, even from a stop or low speed.
– Never attempt donuts, skids, slides, fishtails, jumps, or other stunts. If vehicle starts to skid or slide, steer in the direction of the skid or slide. Never slam the brakes and lock the wheels.
– Avoid paved surfaces. This vehicle is not designed to operate on paved surfaces and is more likely to roll over. If you must drive on pavement, turn gradually, go slowly, and avoid abrupt acceleration and braking.

This vehicle can roll over sideways or tip over forward or backwards on slopes or uneven terrain.

– Avoid side hilling (driving along the slope rather than up or down a hill). When possible, drive straight up and down inclines rather than across them. If you must side hill, use extreme caution and avoid slippery surfaces, objects, or depressions. If you feel the vehicle start to rollover or slide sideways, steer downhill if possible.
– Avoid steep hills and follow procedures in this guide for climbing and descending hills.
– Sudden changes in terrain such as holes, depressions, banks, softer or harder ground or other irregularities may cause the vehicle to tip or become unstable. Observe the terrain ahead and slow down in areas of uneven terrain.

This vehicle will handle differently when carrying or pulling a load.

– Reduce speed and follow instructions in this manual for carrying cargo or pulling a trailer.
– Avoid hills and rough terrain.
– Allow more distance to stop.

Be Prepared in Case of Rollover

– Fasten side nets and seat belt to help you avoid sticking out arms or legs.

– Never grab the cage while riding. Hands can be crushed between the cage and the ground in a rollover. Keep hands on the steering wheel or handholds.
– Never try to stop a rollover using your arms or legs. If you think that the vehicle may tip or roll, the driver should keep both hands on the steering wheel and the left foot firmly planted on the footrest. The passenger should keep both hands on the handholds and both feet firmly planted on the floor.

Avoid Collisions

This vehicle can reach high speeds. At higher speeds, there is an increased risk of losing control, particularly in challenging off-road conditions, and the risk of injury in a collision is greater. Never operate at excessive speeds. Always go at a speed that is proper for the terrain, visibility, and operating conditions, and your experience. Consider reserving use of the performance key for situations in which full speed and acceleration capability are appropriate.

Never operate this vehicle on any public street, road or highway, even dirt or gravel ones. Riding your vehicle on roads or highways could result in a collision with another vehicle. This vehicle is not designed for operation on roads. For example, it does not meet motor vehicle safety standards that apply to automobiles. In many jurisdictions it is not legal to operate this vehicle on public roads.

This vehicle does not have the same kind of protection for collisions as a car; for example, there are no air bags, the cockpit is not fully enclosed, and it is not designed for collisions with other vehicles. Therefore, it is particularly important to fasten seat belts and side nets and wear an approved helmet.

Practice Exercises

Before you go out for a ride, it is very important to familiarize yourself with the handling of your vehicle by practicing in a controlled environment. If possible, it is also a very good idea to take a more formal training course to sharpen your skills and increase your knowledge of the vehicle.

Find a suitable area to practice and perform the following exercises. It should be at least 45 m (150 ft) by 45 m (150 ft) free of obstacles like trees and rocks. Once you've selected a suitable permitted location, proceed with the following practice exercises.

Turning Exercises

Turning is one of the most frequent causes of accidents. It is easier for the vehicle to lose traction or rollover if you turn too sharply, or go too fast. Slow down when you approach a turn.

- First learn how to perform slight right turns at very low speeds. Release the throttle before turning and slowly reapply the throttle when turning.
- Repeat turning exercise but this time maintain the throttle at the level while turning.
- Finally, repeat turning exercise while accelerating slowly.
- Practice exercises turning on the other side.

Note how your vehicle reacts in these different exercises. We recommend releasing the throttle before entering a turn to help initiate directional change. You will feel the lateral force increasing with the speed and with your steering input. The lateral force should be maintained as low as possible to make sure it does not cause the vehicle to roll over.

U Turn Exercises

Practice doing U turns.

- Accelerate slowly and while remaining at low speed, then gradually turn the steering wheel to the right until you have completed the U turn.
- Repeat U turn exercise with different steering inputs and always at a very low speed.
- Repeat U turn exercise on the other side.

As mentioned before in this guide, do not ride on paved surfaces as the vehicle behavior will not be the same, increasing the risk of rollover.

Braking Exercises

Practice braking to get familiar with the brake response.

- Do it at low speed first, then increase the speed.
- Practice braking in straight line at different speeds and different braking force.
- Practice emergency braking; optimal braking is obtained in straight line, with high force applied, without locking the wheels.

Remember, braking distance depends on vehicle speed, load and the type of surface. Also, the tires and brakes conditions play a major role.

Reverse Exercises

The next step involves using the reverse.

- Install 1 cone marker on both sides of the vehicle beside each rear wheel. Move the vehicle forward until you can see the cone markers, then stop the vehicle. Acknowledge the distance required to see obstacles behind you.
- Learn how the vehicle handles itself in reverse and reacts with steering inputs.

– Always perform this reverse exercise at slow speeds.
– Become familiar with the usage of the override function. Do not steer while using the override as it increases the risks of rollover.

Emergency Engine Stopping Exercise

Learn how to stop your engine quickly in an emergency situation.

– While running at low speed, simply turn the ignition key to the off position.

This is to familiarize you with the vehicle's reaction when the engine is turned off while driving and to develop this reflex.

Off-Road Operation

The very nature of off-road operation is dangerous. Any terrain, which has not been specially prepared to carry vehicles, presents an inherent danger where terrain substance, shape and steepness are unpredictable. The terrain itself presents a continual element of danger, which must be knowingly accepted by anyone venturing over it.

An operator who takes a vehicle off-road should always exercise the utmost care in selecting the safest path and keeping close watch on the terrain ahead of him. The vehicle should never be operated by anyone who is not completely familiar with the driving instructions applicable to the vehicle, nor should it be operated on steep or treacherous terrain.

General Riding Techniques

General Driving Tips

Care, caution, experience and driving skill are the best precautions against the hazards of vehicle operation.

Whenever there is the slightest doubt that the vehicle can safely negotiate an obstacle or a particular piece of terrain, always choose an alternate route.

In off-road operation, power and traction, not speed, are important. Never drive faster than visibility and your own ability to select a safe route permit. Always go slowly and be extra careful when operating on unfamiliar terrain. Always be alert to changing terrain conditions when operating this vehicle. Be especially cautious on excessively rough, slippery, icy or loose terrain.

Constantly watch the terrain ahead for sudden changes in slopes or obstacles, such as rocks or stumps, that may cause loss of stability, resulting in tip over or rollover.

Never operate the vehicle if the controls do not function normally. See an authorized Can-Am dealer.

To maintain proper control it is strongly advised that you keep your hands on the steering wheel and within easy reach of all controls. The same holds true for your feet. To minimize the possibility of any leg or foot injury, keep your left foot on the footrest and right foot on the floor at all times. Staying completely within the cockpit will also help keep you from striking objects outside the vehicle.

Watch for and avoid branches and other objects that could enter the cockpit and strike you or your passenger.

Operating in Reverse

When operating in reverse, check that the path behind the vehicle is free of people or obstacles. Pay attention to blind spots. When it is safe to proceed in reverse, go slowly and avoid sharp turns.

⚠ WARNING

Steering inputs in reverse operation increase the risk of rollover.

NOTE: In reverse operation, the engine RPM is limited thus limiting the vehicle reverse speed.

⚠ WARNING

When driving downhill in reverse, gravity can increase the vehicle speed above the set limited reverse speed.

Crossing Roads

If you have to cross a road, ensure to have complete visibility on both sides for incoming traffic and decide on exit point on other side of road. Drive in a straight line toward that point. Do not make sharp direction changes or abrupt accelerations as it may result in a rollover situation. Do not travel on sidewalks or bicycle trails as they are designated specifically for those uses.

Riding on Paved Surfaces

Avoid paved surfaces. This vehicle is not designed to operate on paved surfaces and is more likely to roll over. If you must drive on pavement, turn gradually, go slowly, and avoid abrupt acceleration and braking.

Shallow Water Crossing

Water can be a unique hazard. If it is too deep the vehicle may “float” and topple. Check the water depth and current before you attempt to cross any water. Water depth should not exceed 30 cm (12 in) for vehicle to safely cross the obstacle. Beware of slippery surfaces such as rocks, grass, logs, etc., both in the water and on its banks. A loss of traction may occur. Do not attempt to enter the water at high speed.

Water will affect the braking ability of your vehicle. Make sure you dry the brakes by applying them several times after the vehicle leaves the water.

Mud or marsh lands may be encountered near water. Be prepared for sudden “holes” or changes in depth. Similarly so, be watchful of hazards such as rocks, logs, etc., partially covered by vegetation.

Riding on Snow or Ice

When performing pre-ride inspection, pay special attention to locations on the vehicle where snow and/or ice accumulations may obstruct visibility of the tail lamp, clog ventilation openings, block the radiator and fan, and interfere with the movement of controls. Before starting with your vehicle, check the steering, accelerator and brake pedals for interference free operation.

Whenever this vehicle is ridden on a snow covered drive path, the tire grip is generally reduced causing the vehicle to react differently to control inputs from the operator. On low grip surfaces, the steering responses are not as crisp and precise, stopping distances are lengthened and acceleration is also affected. Slow down and do not "gun" the accelerator. This will only result in spinning of the tires and possibly in an over steering slide of the vehicle. Avoid hard braking. This will possibly result in a straight line slide of the vehicle. Again, the best advice is to safely reduce speed in anticipation of a maneuver to give yourself time and distance in order to keep control of the vehicle.

As you drive your vehicle over a loose snow covered surface, snow dust will be picked up in the wake turbulence of the moving vehicle and transported to contact and accumulate or melt on some exposed components including rotating parts like brake discs. Water, snow or ice may affect the response time of the brake system of your vehicle. Even when not required to reduce vehicle speed apply brakes frequently to prevent ice or snow accumulation and to dry brake pads and discs. While doing so in low risk driving situations you will test for grip level and keep yourself alerted to how the vehicle reacts to your control inputs. Always

keep brake and accelerator pedals and floor boards free of snow and ice. Frequently wipe snow off seat, steering wheel, headlights and tail lamps.

The depth of the snow cover may hide rocks, tree stumps or other objects and if it is wet may totally impede the drivability as the vehicle becomes bogged down or completely looses traction in slushy snow. Look far ahead and always be watchful of any visible clues that might indicate the presence of such obstacles. In doubt steer clear. Avoid driving on any frozen waterways before checking that the ice will safely support the vehicle, its riders and its load of cargo.

At the end of each ride it is a good practice to clean the vehicle and all moving components (brakes, steering components, drivelines, controls, radiator fan etc.) from any snow or ice accumulations. Wet snow will turn to ice during the shut down period and become more difficult to remove at the next pre-ride inspection.

Riding on Sand

Sand and riding on sand dunes is another unique experience but there are some basic precautions that should be observed. Wet, deep or fine sand may create a loss of traction and cause the vehicle to slide, drop off or become "bogged" down. If this occurs look for a firmer base. Again, the best advice is to slow down and be watchful of the conditions.

When riding in sand dunes it is advisable to equip the vehicle with an antenna type safety flag. This will help make your location more visible to others over the next sand dune. Proceed carefully should you see another safety flag ahead.

Riding on Gravel, Loose Stones or Other Slippery Surfaces

Riding on loose stones or gravel is very similar to riding on ice. They will affect the steering of vehicle, possibly causing it to slide and tip over especially at high speeds. In addition, braking distance may be affected. Remember that "gunning" the throttle or sliding may cause loose stones to be ejected rearwards into the path of another rider's way. Never do it deliberately.

If you do get into a slide or skid, it may help to turn the steering wheel into the direction of the skid until you regain control. Never jam the brakes and lock the wheels.

Crossing Obstacles

Use the low range (L) for crossing obstacles.

Obstacles on the "trail" should be traversed with caution. This includes rocks, fallen trees, and depressions. You should avoid them whenever possible. Remember that some obstacles are too large or dangerous to cross and should be avoided. As a guideline, never attempt to cross an obstacle higher than the ground clearance of the vehicle. Small rocks or small fallen trees may be safely crossed - approach obstacle at low speed and as much as possible at a right angle. Adjust speed without losing momentum and do not accelerate abruptly. Passenger must grasp handholds firmly and brace feet on the floor. Hold steering firmly without closing your fists around it and proceed. Be aware that the obstacle may be slippery or may move while crossing.

Hill Driving Conditions

When driving on hills or slopes, two things are highly important: be prepared for slippery surfaces or terrain variations and obstacles and brace yourself properly inside vehicle. If you climb or descend a hill that is too slip-

pery or has too loose a surface, you can lose control. If you go over the top of a hill at high speed, you may not have time to prepare for the terrain on the other side. Avoid parking on a slope. Always put the shift lever in PARK when stopped or parked, especially on an incline, to avoid rolling. If you must park on a steep incline, block the wheels using rocks or bricks.

Uphill Driving

Use the low range (L) for uphill driving.

Due to its configuration, this vehicle has very good traction even while climbing, so much so that tip over is possible before traction is lost. For example, it is common to encounter terrain situations where the top of the hill has eroded to a point that the hill peak rises very sharply. This vehicle is not designed to negotiate such a condition. Take an alternate route.

It is also wise to know the terrain condition on the other side of the hill or bank. All too often there exists a sharp drop-off that is impossible to negotiate or descend.

If you feel that the slope is getting too steep to climb, apply brakes to immobilize vehicle. Put shift lever in reverse (R), and back down the hill, barely releasing brakes to remain at low speed. Do not attempt to turn around. Never coast down hill while vehicle is in neutral. Do not perform hard braking as it increases the risk of tipover.

Downhill Driving

This vehicle can climb steeper slopes than it can descend safely. Therefore, it is essential to assure that a safe route exists to descend a slope before you climb it.

Decelerating while negotiating a slippery downhill slope could "toboggan" the vehicle, causing it to slide. Maintain steady speed and/or accelerate slightly to regain control. Never slam brakes and lock the wheels.

Side Hilling

Whenever possible, side hilling (driving across a slope rather than up or down it) should be avoided. If necessary, do so with extreme caution. Side hilling on steep inclines could result in rollover. In addition, slippery or unfirm surfaces could result in uncontrollable side sliding. Avoid all objects or depressions that will intensify the raising of one side of the vehicle higher than the other, thus causing rollover. If you feel the vehicle start to rollover or slide sideways, steer downhill if possible.

⚠ WARNING

Be careful when loading and transporting liquid reservoirs. They can affect vehicle stability when side hilling by pulling downhill and increasing the risk of a roll over.

Drop-Offs

This vehicle is not designed to negotiate drop-offs. It will "bottom-out" and usually stop if either the front or rear wheels are driven over a drop-off. If the drop is sharp or deep, the vehicle will nose dive and tip over.

Avoid negotiating drop-offs. Reverse and select an alternate route.

Recreational, Group and Distance Riding

Respect the rights and limitations of others. Stay away from areas designated for other types of off road use. This includes snowmobile trails, equestrian trails, cross country ski trails, mountain bike trails, etc. Never assume there are no other users on the trail. Always stay to the right of the trail and do not zig zag to one side of the trail then the other. Be prepared to stop or pull off to the side if another trail user appears in front of you.

Join a local side-by-side vehicle club. It will provide you with a map and advice or inform you where you can ride. If a

club does not exist in your area, help to start one. Group riding and club activities provide a pleasurable, social experience. Never use this vehicle with drugs or alcohol, or tired or ill.

Always keep a safe distance from other riders. Your judgment of speed, terrain conditions, weather, mechanical condition of your vehicle and the "trust in judgment" you have in others around you will help you make a better choice of appropriate safe distance. This vehicle, like any other motorized vehicle, cannot stop "on a dime".

Before you ride, tell someone where you are planning to travel and your expected time of return.

Depending on the length of your ride, carry additional tools or emergency equipment. Find out where you can get additional gasoline. Be prepared for the possible conditions you may encounter. An emergency first aid kit should always be a consideration.

Environment

One of the benefits of this vehicle is that it can take you off the beaten path away from most communities. However, you should always respect nature and the rights of others to enjoy it. Do not ride in environmentally sensitive areas. Do not drive over forest crops or shrubs, nor cut down trees or take down fencing, nor spin your wheels and destroy the terrain. "Tread Lightly".

This vehicle can cause OHV wildfires if debris builds up near the exhaust or other engine hot spots and ignites then falls off into dry grass. Avoid riding in wet areas, through muskeg or tall grass, where debris can build up. Should you ride in those areas, inspect and remove all debris from your engine and hot spots. Refer to *MAINTENANCE* section for details.

Chasing wildlife is in many areas illegal. Wildlife can die of exhaustion after being chased by a motorized vehicle. If you encounter animals on the trail, stop and observe quietly and with caution. It will be one of the better memories of your life.

Observe the rule... "what you take in, carry out". Do not litter. Do not start campfires unless you have permission to do so, and then only away from dry areas. The hazards you may create on the trail may cause injury to others or yourself, even at a later date.

Respect farm lands. Always obtain the permission of the landowner before riding on private land. Respect crops, farm animals and property lines.

Finally, do not pollute streams, lakes or rivers and do not modify the engine or exhaust system, or remove any of its components as it will alter the vehicle emissions.

MOVING LOADS AND DOING WORK

Working with your Vehicle

Your vehicle can help you perform a number of different LIGHT tasks ranging from snow removal to pulling wood or carrying cargo. A variety of accessories are available from your authorized Can-Am dealer. To prevent possible injury, follow the instructions and warnings that accompany the accessory. Always respect the load limits of the vehicle. Overloading the vehicle can overstress the components and cause failure. Avoid overexerting yourself if you lift or pull heavy loads or manually push the vehicle.

Carrying Loads

Any load carried on the vehicle will affect the handling, stability and braking distance of the vehicle. Do not exceed the load limits of the vehicle, including the weight of operator, passenger, cargo, accessories and trailer tongue weight.

LOAD LIMIT OF THE VEHICLE	
363 kg (800 lb) (all models except LTD and Mossy Oak Hunting Edition) 340 kg (750 lb) (LTD model) 321 kg (707 lb) (Mossy Oak Hunting Edition)	Includes occupants, cargo, tongue weight and added accessories

Following are examples of suitable total vehicle load distribution:

EXAMPLES OF SUITABLE VEHICLE TOTAL LOADS (ALL MODELS EXCEPT LTD AND MOSSY OAK HUNTING EDITION)				
OPERATOR AND PASSENGER	CARGO BOX LOAD	ACCESSORIES	TONGUE WEIGHT	TOTAL VEHICLE LOAD
200 kg (441 lb)	70 kg (154 lb)	25 kg (55 lb)	68 kg (150 lb)	363 kg (800 lb)
100 kg (220 lb)	263 kg (580 lb)	0 kg (0 lb)	0 kg (0 lb)	363 kg (800 lb)

EXAMPLES OF SUITABLE VEHICLE TOTAL LOADS (LTD MODELS)				
OPERATOR AND PASSENGER	CARGO BOX LOAD	ACCESSORIES	TONGUE WEIGHT	TOTAL VEHICLE LOAD
200 kg (441 lb)	47 kg (104 lb)	25 kg (55 lb)	68 kg (150 lb)	340 kg (750 lb)
100 kg (220 lb)	240 kg (530 lb)	0 kg (0 lb)	0 kg (0 lb)	340 kg (750 lb)

To reduce the risk to lose control or the load carried, follow these recommendations.

Vehicle Settings When Carrying Load

When the total load exceeds 180 kg (400 lb), including weight of operator, passenger, cargo, accessories and trailer tongue weight, inflate the tires to maximum pressure 83 kPa (12 PSI) Front, 152 kPa (22 PSI) Rear.

NOTE: When carrying heavy loads or passenger readjust suspension accordingly.

NOTE: When carrying heavy loads in cargo box or pulling a trailer operate with the shift lever in L (low range).

Loading the Cargo Box

NOTICE **When loading or unloading, do not exceed the weight limit of 100 kg (220 lb) on either tailgate.**

Load cargo as low as possible – a higher load can raise the vehicle's center of gravity, which can reduce stability. Position cargo toward the front and center of the cargo box and as evenly as possible.

Secure the load to the tie down hooks inside cargo box. Use only the tie down hooks on the bottom of the cargo box; do not secure cargo to the cage or other part of the vehicle. If it is not properly secured, a load may slide or fall off, possibly striking occupants or bystanders; or it may shift during riding, affecting the handling of the vehicle.

Objects that are higher than the walls of the cargo bed may affect visibility for the driver and may act as projectiles in case of an accident. Loads that protrude sideways can get snagged or caught in bush, branches or other obstacles. Avoid covering and obstructing the brake lights with the cargo. Ensure no cargo protrudes outside the box and that cargo will not interfere with your visibility or control of the vehicle.

Do not overload cargo box.

Close both tailgates before operating.

MAXIMUM CARGO BOX LOADS		
CARGO BOX (TOTAL)	272 kg (600 lb)	Evenly distributed and safely secured. Loaded as low as possible to reduce height of center of gravity.
LOWER CARGO BOX	272 kg (600 lb)	Evenly distributed.
UPPER CARGO BOX	181 kg (400 lb)	Evenly distributed on floor separator.
UPPER TAILGATE	100 kg (220 lb)	Only while loading cargo into cargo box. Never operate with tailgate open.
LOWER TAILGATE	100 kg (220 lb)	Only while loading cargo into cargo box. Never operate with tailgate open.

Following are examples of cargo box loading limits:

EXAMPLES OF CARGO BOX TOTAL LOADS		
CARGO BOX UPPER SECTION LOAD	CARGO BOX LOWER SECTION LOAD	TOTAL CARGO BOX LOAD
0 kg (0 lb)	272 kg (600 lb)	272 kg (600 lb)
100 kg (220 lb)	172 kg (380 lb)	272 kg (600 lb)
181 kg (400 lb)	91 kg (200 lb)	272 kg (600 lb)

Operating While Carrying a Load

Reduce your speed when carrying cargo and turn gradually. Avoid hills and rough terrain. Allow more distance for braking. This vehicle may require additional stopping distance if carrying heavy loads, especially on inclined surfaces.

Tilting the Cargo Box

The cargo box can be tilted to ease unloading. Use release handles on either side of cargo box.

tmo2011-001-518_a

1. RH release handle

NOTICE Always turn off engine when tilting the cargo box.

⚠ WARNING

- Always ensure no one is standing behind the cargo box before you actuate the release handle.
- The load weight may affect the operation of the cargo box tilting feature (tilting or lowering).

Be very careful with the operation of the tail gates and the cargo box as the load may have moved during transport.

To lower the cargo box, simply push it down into place.

⚠ WARNING

- Keep yourself and others clear of the cargo box and vehicle frame junction when lowering cargo box.
- Ensure to properly latch the cargo box and the tailgates before riding.
- Make sure you do not leave objects between lifted cargo box and vehicle frame to ensure proper latching of the cargo box when lowered.

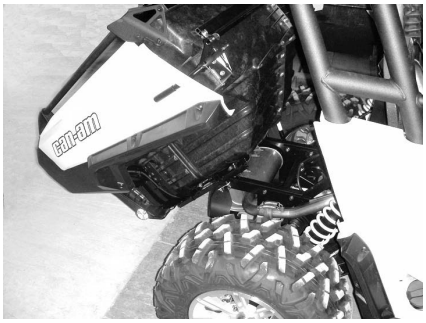

tmo2011-001-503

FRONT SECTION OF INCLINED CARGO BOX FREE OF ANY OBJECTS

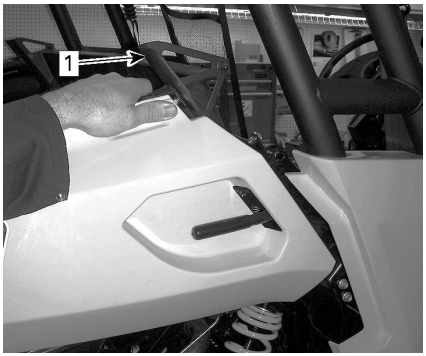

tmo2011-001-310_a

PUSH TO CLOSE
1. Hand guard

Hauling a Load

NOTICE **A BRP approved rear hitch must be properly installed on the vehicle for hauling trailers.**

Never pull a load by attaching it to the cage; this can cause the vehicle to tip over. Use only the trailer hitch or winch (if installed) to pull a load.

When pulling loads with a chain or cable, ensure that there is no slack before starting and maintain tension while pulling.

When pulling loads with a chain or cable, be sure to brake progressively. The inertia of the load could lead to an impact.

When hauling a load, respect the maximum hauling capacity. See *PULLING A TRAILER* subsection.

⚠ WARNING

Slack can cause the chain or cable to break and snap back.

When pulling another vehicle, be sure that someone is controlling the pulled vehicle. They must brake and steer to prevent the vehicle from going out of control.

Before pulling loads with a winch, refer to the winch manufacturer's instructions.

Reduce your speed when hauling a load and turn gradually. Avoid hills and rough terrain. Never attempt steep hills. Allow more distance for braking, especially on inclined surfaces and when a passenger is on board. Be careful not to skid or slide.

Pulling a Trailer

NOTICE **A BRP approved rear hitch plate must be properly installed on the vehicle for hauling trailers.**

Riding this vehicle with a trailer substantially increases the risk of toppling, especially on inclined slopes. If a trailer is used behind the vehicle make sure that its hitch is compatible with the one on the vehicle. Make sure the trailer is horizontal with the vehicle. (In some instances a special extension may have to be installed on the vehicle hitch). Use security chains or cables to secure the trailer with the vehicle.

Reduce your speed when pulling a trailer and turn gradually. Avoid hills and rough terrain. Never attempt steep hills. Allow more distance for braking, especially on inclined surfaces and when a passenger is on board. Be careful not to skid or slide.

Improperly loading a trailer may cause loss of control. Respect the recommended maximum hauling capacity and maximum tongue load (Refer to *MAXIMUM HAULING CAPACITY* table). Make sure there is at least some weight on the tongue.

Always make sure load is evenly distributed and safely secured on the trailer; an evenly balanced trailer is easier to control.

Always put the shift lever to L (low range) for hauling a trailer – in addition to providing more torque, operating in low range helps account for the increased load on the rear tires.

When stopped or parked, block the vehicle and trailer wheels from possible movement.

Use caution when disconnecting a loaded trailer; it or its load may topple on you or others.

When hauling a trailer, respect the following maximum hauling capacity.

MAXIMUM HAULING CAPACITY		
TYPE OF ATTACHMENT	TRAILER LOAD ALLOWED	TONGUE WEIGHT ALLOWED
50.8 mm (2 in) X 50.8 mm (2 in) hitch ball support	680 kg (1,500 lb)	68 kg (150 lb)
38 mm (1.5 in) X 38 mm (1.5 in) hitch ball support and the appropriate hitch adapter	400 kg (882 lb)	40 kg (88 lb)
NOTE: Includes trailer and trailer load. Ensure to properly load the trailer so that tongue is always pushing on hitch support and not pulling on hitch ball.		

IMPORTANT ON-PRODUCT LABELS

Hang Tag

This vehicle comes with a hang tag and labels containing important safety information.

Any person who rides this vehicle should read and understand this information before riding.

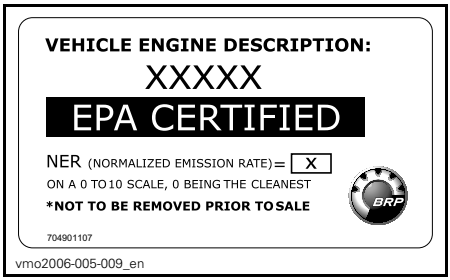

TYPICAL: APPLICABLE FOR ALL MODELS IN CANADA AND UNITED STATES, APPLICABLE FOR MODELS EVERYWHERE EXCEPT CANADA AND UNITED STATES WHEN EQUIVALENT TO A MODEL CERTIFIED TO US. EPA STANDARDS

ATTACHED TO COMPRESSOR HOSE

Safety Labels

Read and understand all the safety labels on your vehicle.

These labels are affixed to the vehicle for the safety of the operator, passenger or bystanders.

The following labels are on your vehicle, and they should be considered permanent parts of the vehicle. If missing or damaged, they can be replaced free of charge. See an authorized Can-Am dealer.

NOTE: In the event of any discrepancy between this guide and the vehicle, the safety labels on the vehicle have precedence over the labels in this guide.

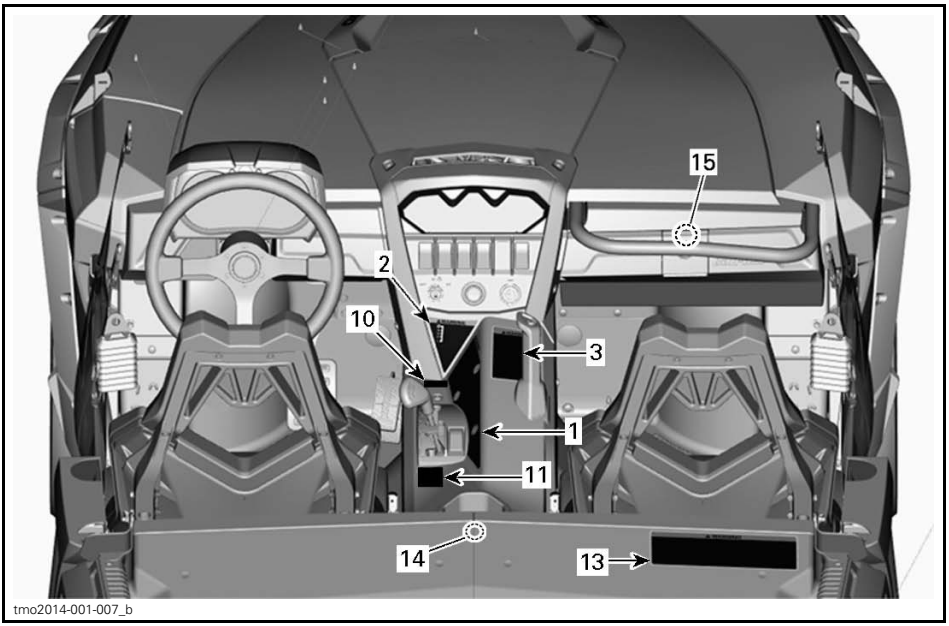

TYPICAL

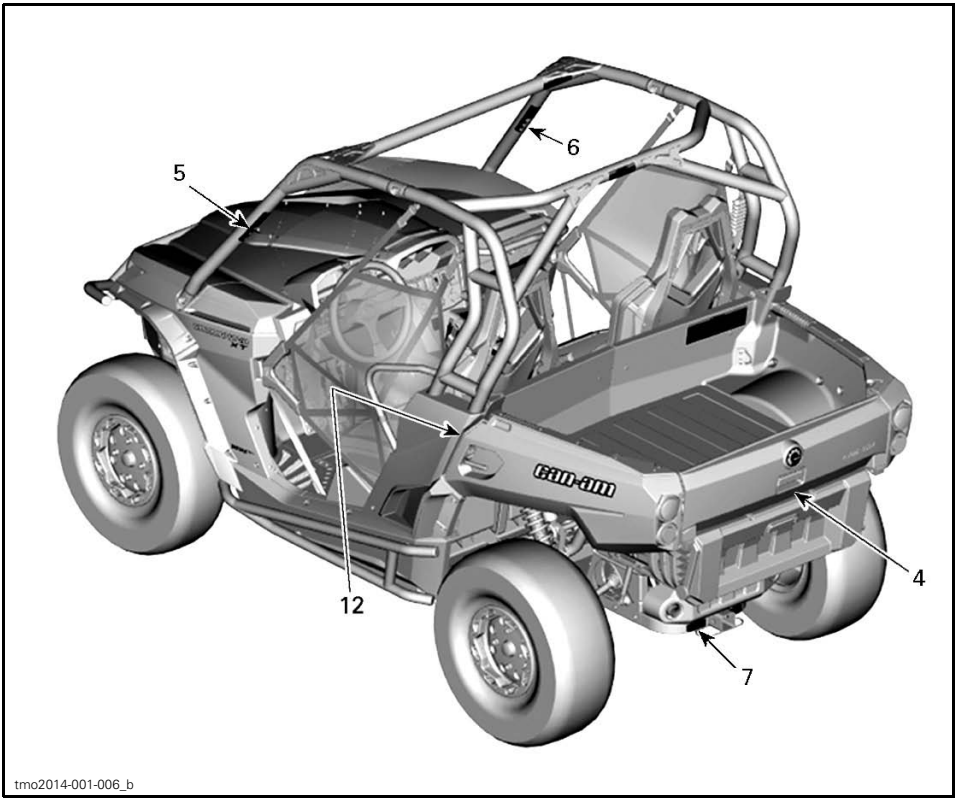

TYPICAL

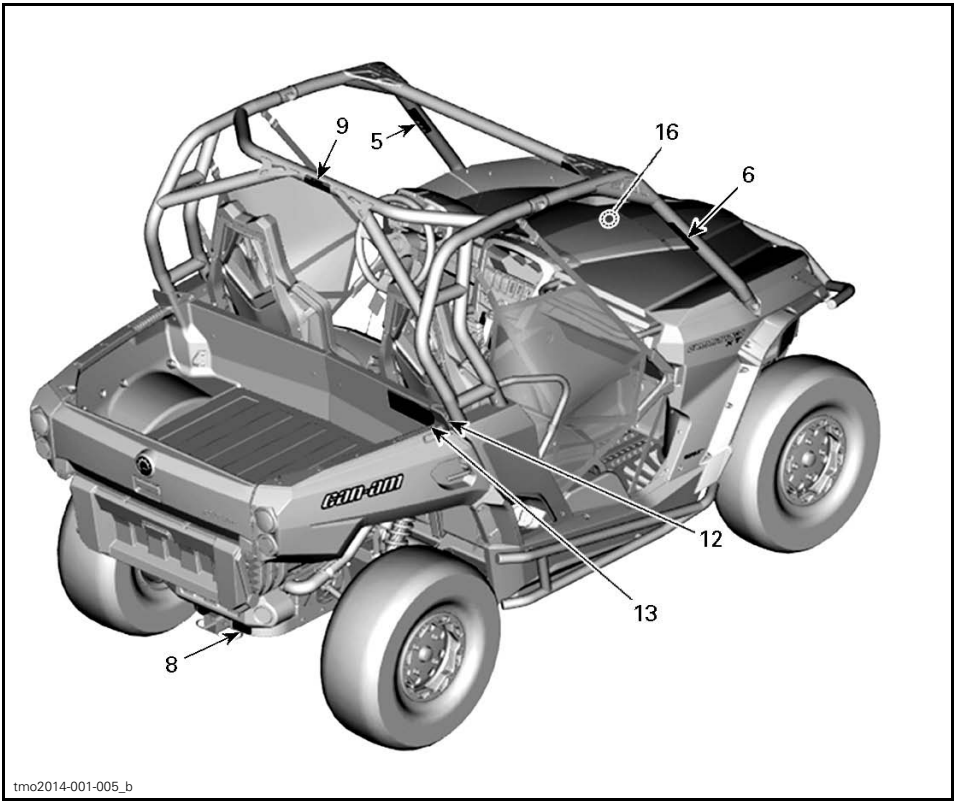

TYPICAL

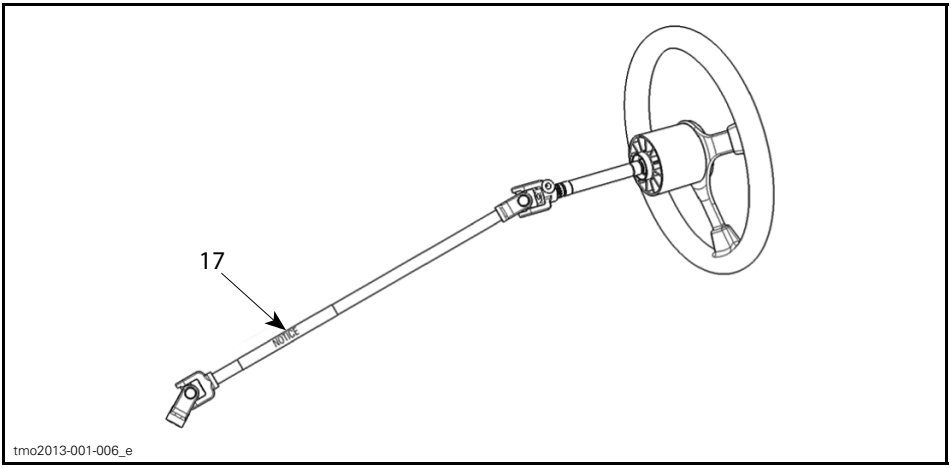

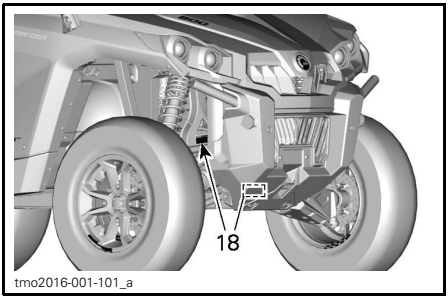

TYPICAL

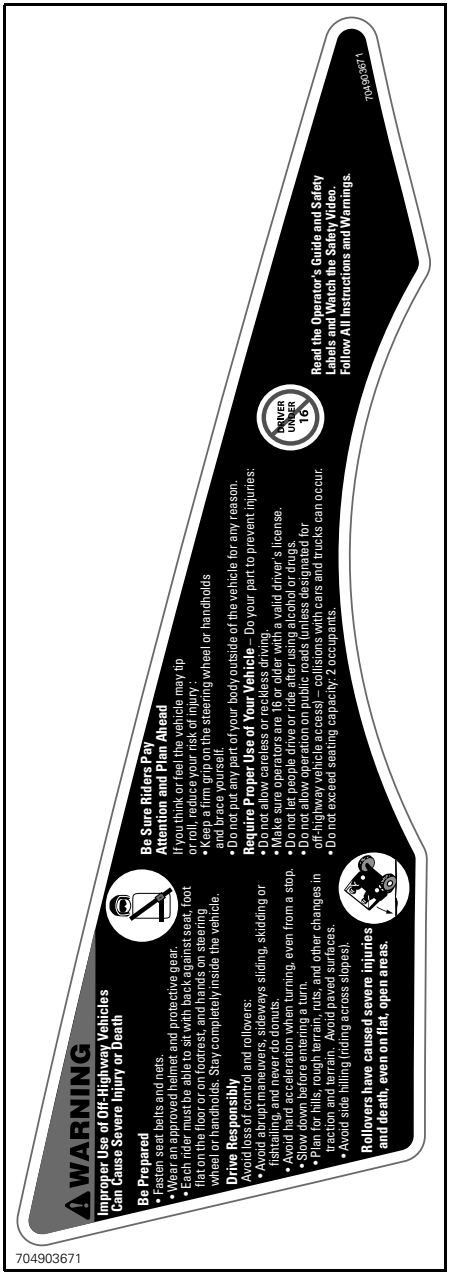

LABEL 1

LABEL 2

LABEL 4

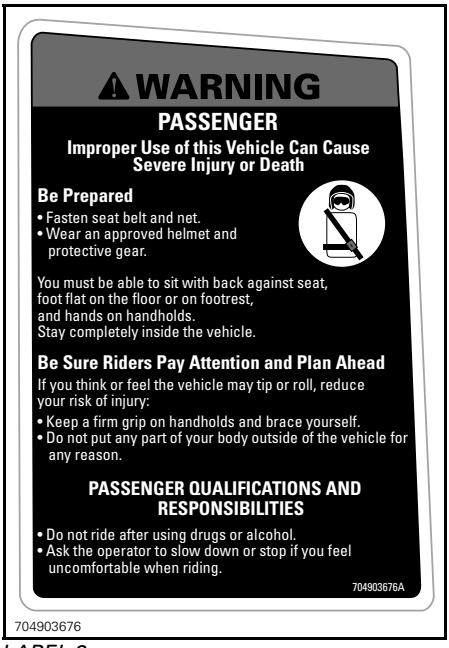

LABEL 3

LABEL 5

704903680

LABEL 6

704902336B

LABEL 7

704902345C

LABEL 8

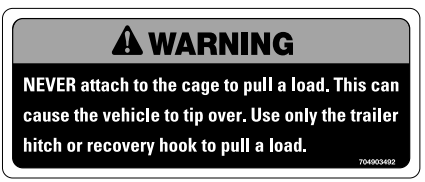

704903492

LABEL 9

704905623

LABEL 10

LABEL 11

LABEL 12

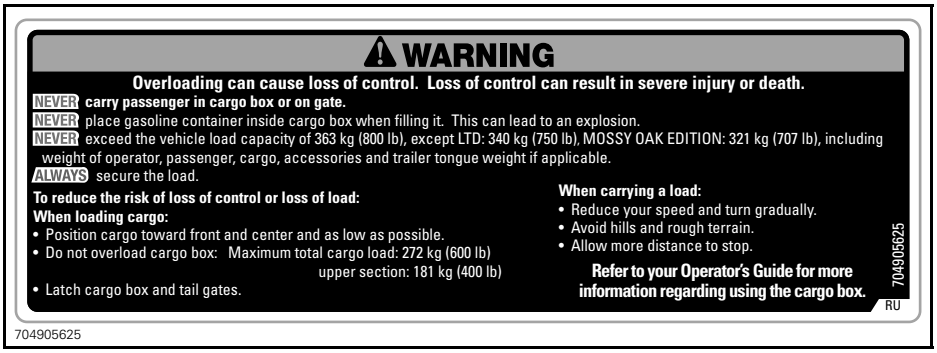

LABEL 13

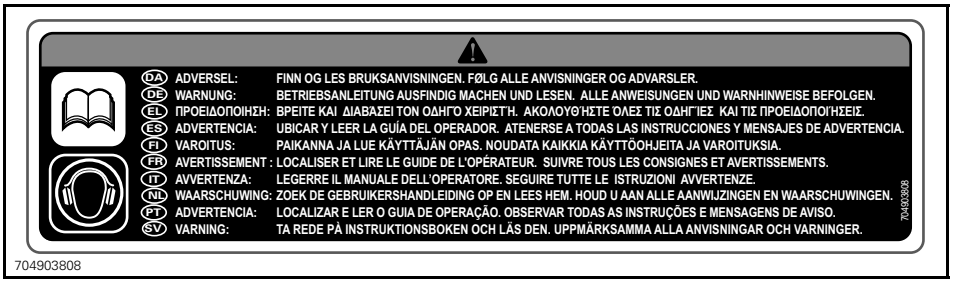

LABEL 14 - OUTSIDE CAN - US

LABEL 15

vmo2010-010-100_a

LABEL 16

NOTICE

DO NOT USE ANY COMPONENT OF THE STEERING SYSTEM TO JUMP - START THE VEHICLE. FAILURE TO COMPLY WILL RESULT IN DPS UNIT MALFUNCTION.

DO NOT USE ANY COMPONENT OF THE STEERING SYSTEM TO JUMP - START THE VEHICLE. FAILURE TO COMPLY WILL RESULT IN DPS UNIT MALFUNCTION.

704903434

704903434

LABEL 17

⚠ WARNING

Never use the frame near this location to ground any electrical component such as a winch. When in use, the electrical component may induce an undesired power steering signal resulting in an unintended steering input. In certain circumstances, some unintended steering input could lead to a loss of vehicle control increasing the risk of serious injury or death.

704903515

704903515

LABEL 18

Compliance Labels

These labels indicate vehicle's compliance.

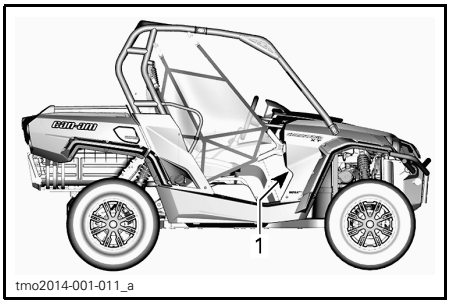

tmo2014-001-011_a

TYPICAL

1. Compliance labels located under glove box

CE

CAN ICES-2/NMB-2

POWER
PUISSANCE kW

WET WEIGHT
POIDS EN ETAT DE MARCHE kg

704904561

704904561

EMISSION CONTROL INFORMATION

THIS VEHICLE IS CERTIFIED TO OPERATE ON UNLEADED GASOLINE AND CONFORMS TO ____ U.S. EPA & CALIFORNIA EMISSION / EVAP REGULATIONS FOR ATV AND OFF-ROAD SPORT VEHICLE.

EC 121

ENGINE FAMILY		FAMILLE DE MOTEUR
PERMEATION FAMILY		FAMILLE DE PERMEATION
CERTIFICATION STANDARD (FEL)		LIMITE DES ÉMISSIONS DE LA FAMILLE
ENGINE DISPLACEMENT		CYLINDRÉE
EXHAUST EMISSION CONTROL SYSTEM		SYSTÈME DE CONTRÔLE DES ÉMISSIONS

RENSEIGNEMENTS SUR LE DISPOSITIF ANTIPOLLUTION

CE VÉHICULE EST CERTIFIÉ POUR FONCTIONNER À L'ESSENCE SANS PLOMB ET IL EST CONFORME AUX NORMES ____ DE L'EPA ET DE LA CALIFORNIE AU NIVEAU DES RÉGLEMENTATIONS DE L'ÉCHAPPEMENT ET DE L'ÉVAPORATION POUR LES VTT ET LES VÉHICULES HORS-ROUTE SPORTS.

SEE OPERATOR'S GUIDE FOR MAINTENANCE SCHEDULE
VOIR LE PROGRAMME D'ENTRETIEN DANS LE GUIDE DU CONDUCTEUR

BOMBARDIER RECREATIONAL PRODUCTS INC.

704 904653

704904653

TYPICAL: APPLICABLE FOR ALL MODELS IN CANADA AND UNITED STATES, APPLICABLE FOR MODELS EVERYWHERE EXCEPT CANADA AND UNITED STATES WHEN EQUIVALENT TO A MODEL CERTIFIED TO US. EPA STANDARDS

Bombardier Recreational Products Inc. certifies that this ROV complies with the American National Standard for Recreational Off-Highway Vehicles, ANSI/ROHVA 1 - 2011 Standard.

Bombardier Produits Récréatifs Inc. certifie que ce véhicule récréatif hors-route est conforme à la norme "American National Standard for Recreational Off-Highway Vehicles", ANSI/ROHVA 1 - 2011.

ROPS meets the performance requirements of ISO 3471.

Cette structure de protection contre le retournement (ROPS) respecte les requis de performance de la norme ISO 3471.

704903888

704903888

LOCATED ON TOP RIGHT OF FRONT BAR OF CAGE

This page is intentionally blank

VEHICLE INFORMATION

PRIMARY CONTROLS

It is important to know the location and operation of all controls, and to develop and practice smooth and coordinated use of them.

NOTE: Some vehicle safety labels are not shown on illustrations. For information on vehicle safety labels, refer to *VEHICLE SAFETY LABELS* subsection.

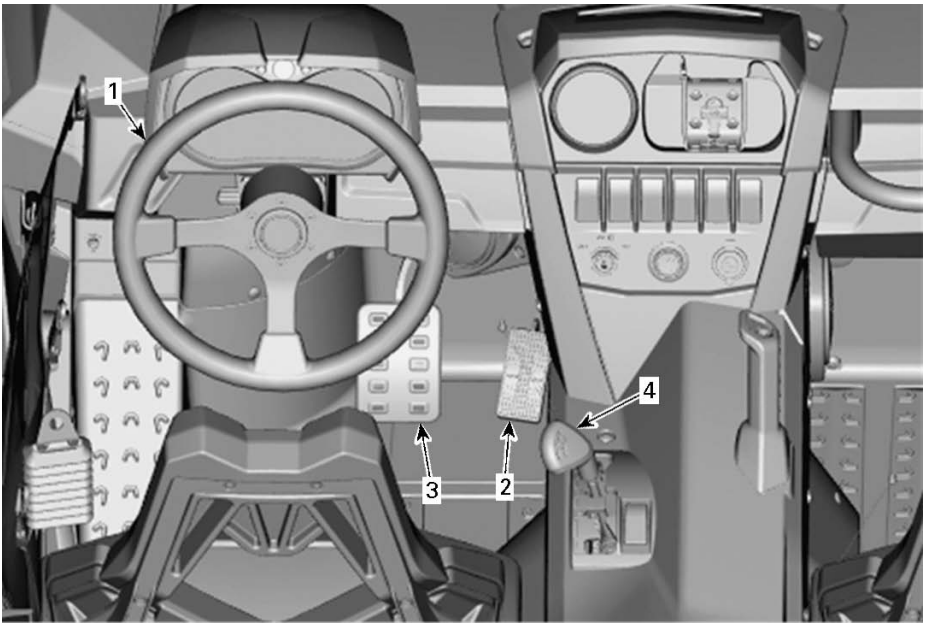

tmo2014-001-009_a

TYPICAL - PRIMARY CONTROLS

1) Steering Wheel

The steering wheel is located in front of the driver's seat.

The steering wheel steers the vehicle to the left or right.

Steer the steering wheel in the direction you want to go.

tmo2014-001-012_a

TYPICAL
1. Steering wheel

Grip the steering wheel with both hands, without having thumbs rolled around the steering wheel.

⚠ CAUTION Under rough trail conditions or when crossing an obstacle, the steering wheel could suddenly jerk on one side, causing hand or wrist injuries if the thumbs are rolled around the steering wheel.

Models with DPS

The DPS reduces the effort to turn the steering wheel.

2) Accelerator Pedal

The accelerator pedal is located on the right side of the brake pedal.

The accelerator pedal controls the engine speed.

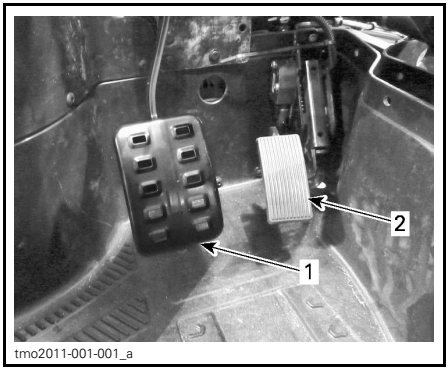

1. *Brake pedal*
2. *Accelerator pedal*

To increase or maintain vehicle speed, press on the accelerator pedal with your right foot.

To decrease vehicle speed, release the accelerator pedal.

The accelerator pedal is spring loaded and should return to rest position (idle) when not pressed.

NOTE: The accelerator pedal should never be disassembled.

3) Brake Pedal

The brake pedal is located on the left side of the accelerator pedal.

The brake pedal function is to slow down or stop the vehicle.

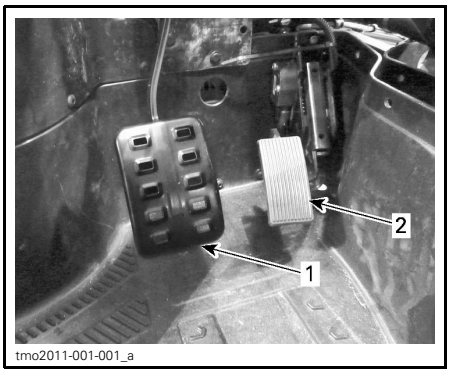

1. *Brake pedal*
2. *Accelerator pedal*

To decrease vehicle speed or to stop vehicle, press down the brake pedal with your right foot.

The brake pedal is spring loaded and should return to rest position when not pressed.

4) Shift Lever

The shift lever is located on the lower console.

The shift lever is used to change the gearbox position.

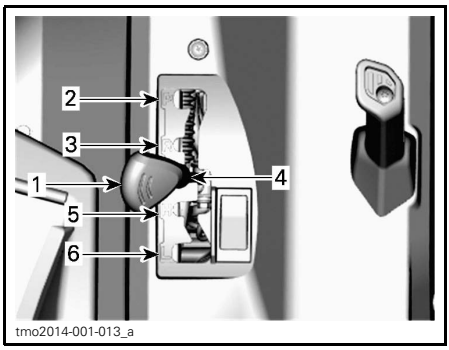

1. *Shift lever*
2. *Park*
3. *Reverse*
4. *Neutral*
5. *High range (forward)*
6. *Low range (forward)*

The vehicle must be stopped and brakes applied prior to selecting any gear.

NOTICE This gearbox is not designed to shift while vehicle is moving.

Park

The park position locks the gearbox to help prevent vehicle movement.

⚠ WARNING

Always use the PARK (P) position when the vehicle is not in operation. The vehicle can roll if the shift lever is not set to P (PARK).

Reverse

The reverse position allows the vehicle to go backwards.

NOTE: In reverse operation, the engine's RPM is limited, thus limiting the vehicle reverse speed.

⚠ WARNING

When driving downhill in reverse, gravity can increase the vehicle speed above the set limited reverse speed.

Neutral

The neutral position disengages the gearbox.

High Range (Forward)

This position selects the high speed range of the gearbox. It is the normal driving speed range. It allows the vehicle to reach its maximum speed.

Low Range (Forward)

This position selects the low speed range of the gearbox. It allows the vehicle to move slowly with maximum torque at the wheels.

NOTICE Use the low speed range to pull a trailer, carry heavy cargo, go over obstacles or drive uphill and downhill.

SECONDARY CONTROLS

NOTE: Some vehicle safety labels are not shown on illustrations. For information on vehicle safety labels, refer to *VEHICLE SAFETY LABELS* subsection.

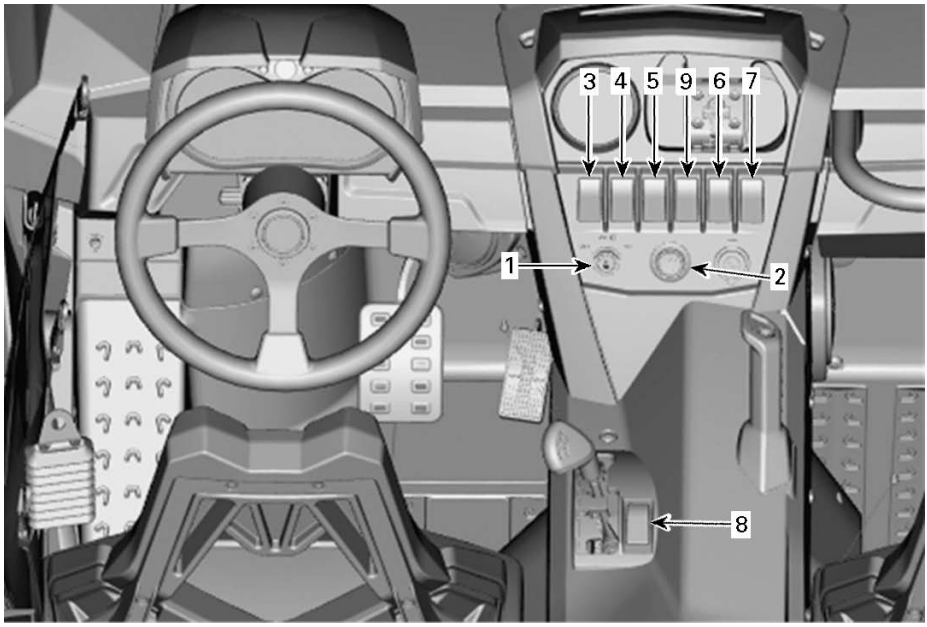

tmo2014-001-009_b

TYPICAL - SECONDARY CONTROLS

1) Ignition Switch and Keys

Ignition Switch

The ignition switch is located on the upper console area.

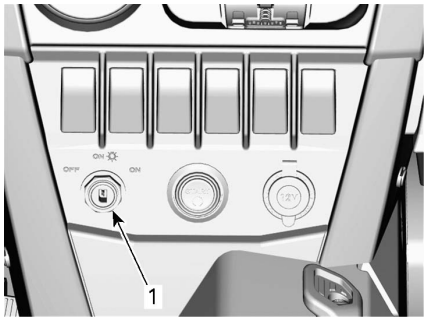

tmo2014-001-014_a

1. Ignition switch

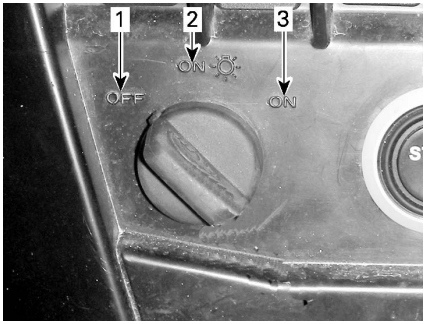

tmo2011-001-036_a

IGNITION SWITCH POSITION
1. OFF
2. ON with lights
3. ON

OFF

The key can be inserted or removed in this position only.

In OFF position, the electrical system of the vehicle is disabled.

The engine is shut down by turning the ignition switch to OFF position.

ON with Lights

When the key is turned in this position, the electrical system of the vehicle is activated.

The gauge should wake-up.

The vehicle lights are turned on.

The engine can be started.

ON

This position offers the same functions as ON with lights position, except the vehicle lights are turned off.

Ignition Keys

Digitally Encoded Security System (D.E.S.S.)

The ignition keys contain an electronic circuit that gives it a unique electronic serial number.

The D.E.S.S. system reads the key code and allows engine starting for keys it recognizes.

Types of Keys

This vehicle can be operated using 3 different types of ignition keys:

- Normal key (grey)
- Performance key (black)
- Optional Work key (orange).

The key type is differentiated by its color.

⚠ WARNING

Rollovers, tipovers, collisions and loss of control resulting in serious injury or death are possible with the performance, normal or optional work keys. Using the work key or normal key is not a substitute for the operator being prepared, qualified, and operating with care.

Normal Key

The vehicle is delivered with a normal key.

The normal key limits the overall performance to 70% of maximum engine torque and vehicle speed to 70 km/h (43 MPH).

⚠ WARNING

On steep downhills, the engine speed limiter may not prevent the vehicle from accelerating beyond this speed.

This key may be useful for riders who prefer more gradual acceleration, or for riding in environments where full speed and high acceleration are not desirable. For example, in narrow, winding trails, operators may prefer the normal key.

Performance Key

The vehicle is delivered with a performance key, which allows the user to access the full torque of the engine as well as the top speed of the vehicle.

This may be useful for riders who prefer greater acceleration, and for environments where higher speeds and greater acceleration are appropriate. For example, in wide-open, straight trails, operators may prefer the performance key.

Optional Work Key

A work key is also available at your dealership.

The work key limits the overall performance to 50% of maximum engine torque and vehicle speed to 40 km/h (25 MPH).

⚠ WARNING

On steep downhills, the engine speed limiter may not prevent the vehicle from accelerating beyond this speed.

This may be useful for riders who use this vehicle in a workplace environment where lower speeds and acceleration are a requirement.

2) Engine Start Button

The engine start button is located on the upper console. When pressed and held, it starts the engine.

NOTE: The ignition switch must be in the **ON or ON with lights position** to allow engine start.

NOTE: If the ignition switch is left ON for more than 15 minutes, engine will not start unless ignition switch is turned OFF, then ON again.

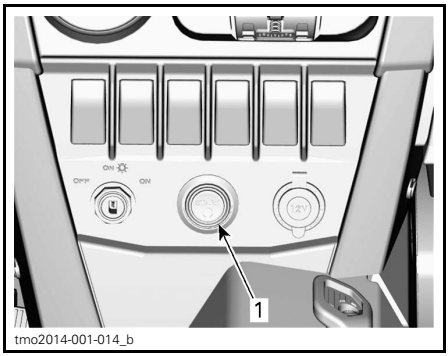

1. Engine start button

3) Low/High Beam Headlight Switch

The low/high beam headlight switch is located on the upper console.

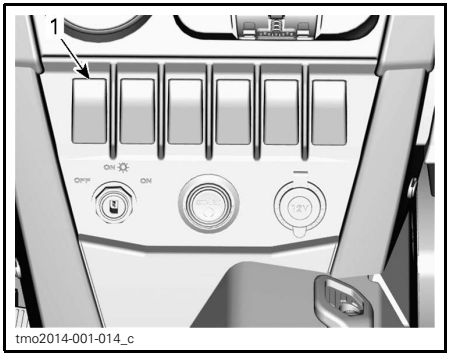

1. Low/High beam headlight switch

This switch is used to select either the headlights low or high beams.

4) 2WD/4WD Switch

The 2WD/4WD switch is located on the upper console.

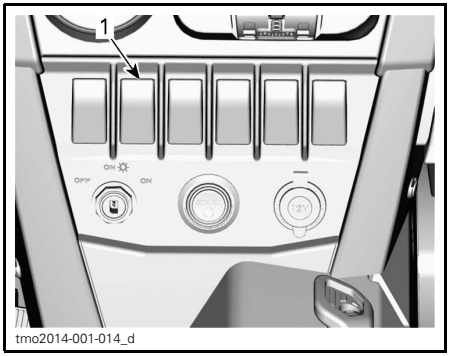

1. 2WD/4WD switch

This switch selects 2 wheel drive or 4 wheel drive mode when the vehicle is stopped and the engine is running.

NOTICE **The vehicle must be stopped to engage or disengage 2WD/4WD switch. Mechanical damage may occur if switch is engaged or disengaged while driving.**

The 4WD mode is engaged when the switch is pushed upwards.

The 2WD mode is engaged when the switch is pushed downwards. The vehicle is then rear wheel drive only.

5) Sport/ECO Mode Switch

The sport/ECO switch is located on the upper console.

It is used to select the sport or ECO mode in high range.

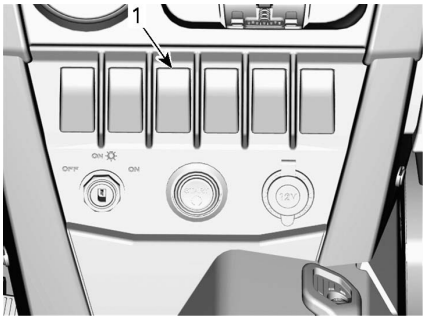

tmo2014-001-014_e

1. *Sport/ECO switch*

The sport mode provides a crisper throttle response.

NOTE: The sport mode can be activated with all key types and provides the maximum power with the used key.

The ECO (fuel economy mode) setting reduces fuel consumption by limiting throttle response and maximum throttle opening to maintain an optimal cruising setting.

NOTE: Use ECO mode on bumpy trails to provide smoother ride conditions.

6) ACS Switch (LTD Models Only)

The ACS switch is located on the upper console.

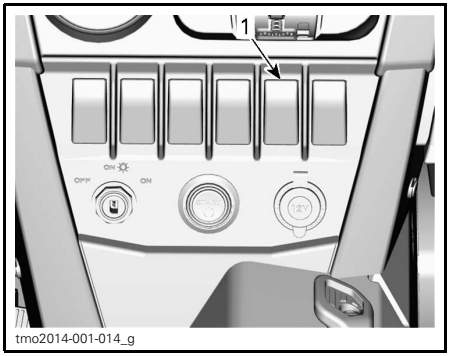

tmo2014-001-014_g

1. *ACS switch*

The ACS switch function is to adjust the ACS suspension.

To adjust the ACS suspension setting, refer to *SUSPENSION* subsection.

7) Winch Switch (Models with Winch)

The winch can be controlled from inside the vehicle with the winch control switch located in the upper console.

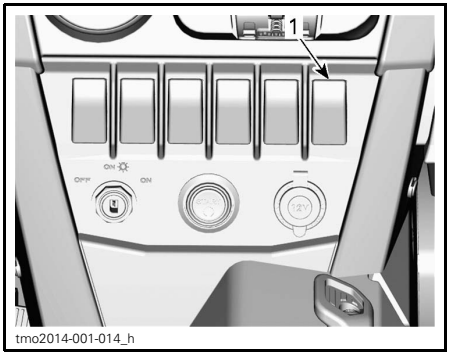

tmo2014-001-014_h

1. *Winch switch*

Refer to your *BASIC GUIDE TO WINCHING TECHNIQUES* included with your vehicle for proper winch operation.

8) Override Switch

The override switch is located on the lower console beside the shift lever.

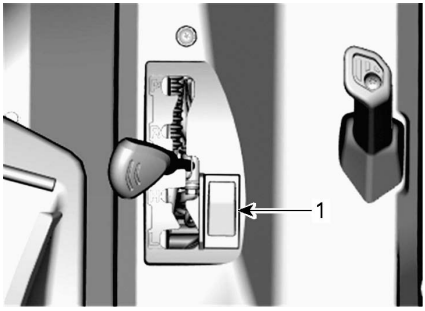

1. Override switch

The override switch main functions are:

1. To bypass the engine speed limiter in reverse operation by allowing maximum engine torque

⚠ WARNING

Only use the override to help get the vehicle unstuck from mud or other soft terrain. Do not use the override for normal operation in reverse. This would allow driving in reverse at excessive speeds and can increase the risk of losing control.

2. To temporarily deactivate the electronic drive belt protection (if available and activated on your model).

⚠ WARNING

Only use the override if it is not possible to shift in LOW range. Do not use the override for normal operation and always be aware of your surroundings when using the override.

3. To erase the MAINTENANCE REQUIRED message, refer to *MESSAGE DISPLAY MODE* or *MULTI-FUNCTION DISPLAY* subsection.
4. To move vehicle in case of a pedal accelerator failure, refer to *TROUBLESHOOTING GUIDELINES* subsection.

To engage the override function, proceed as follows:

1. Press and hold the override switch then press the accelerator pedal gradually.

NOTE: While in REVERSE and using the override function, the gauge will scroll an OVERRIDE message to confirm that the function is activated.

2. To disengage the override function, simply release the override switch.

9) DPS Switch (All Models Except Base)

The DPS switch is used to change the DPS (Dynamic Power Steering) mode.

To change mode, DPS switch needs to be held for at least 2 seconds. If held for less than 2 seconds, it will show the selected mode.

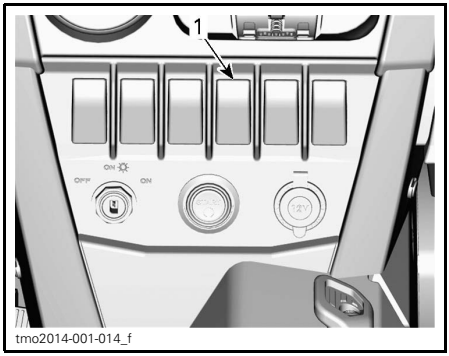

1. DPS switch

MULTIFUNCTION GAUGE (LCD) (BASE AND DPS MODELS)

The multifunction gauge (LCD) is located on the steering column.

⚠ WARNING

Do not adjust the display while riding . You could lose control.

Multifunction Gauge Description

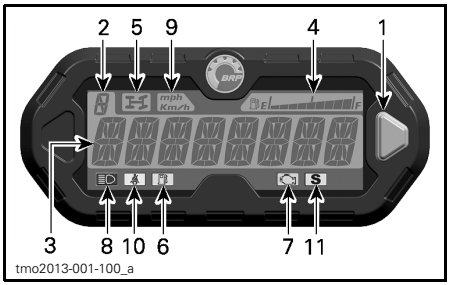

1. *Selector button*
2. *Transmission position display*
3. *Main screen*
4. *Fuel level display*
5. *4WD indicator lamp*
6. *Low fuel level indicator lamp*
7. *Check engine indicator lamp*
8. *High beam indicator lamp*
9. *MPH and KM/H indicator lamp*
10. *Seat belt indicator lamp*
11. *Sport mode indicator lamp*

1) Selector Button

The selector button is used to navigate or change settings in the multifunction gauge.

2) Transmission Position Display

This display will show transmission position.

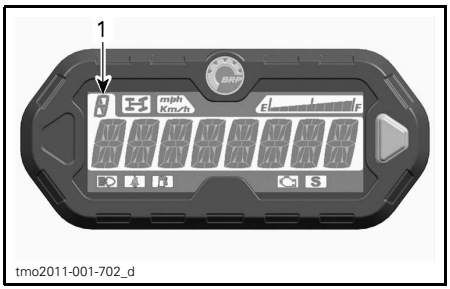

1. *Transmission position*

DISPLAY	FUNCTION
P	Park
R	Reverse
N	Neutral
H	High range
L	Low range

3) Main Screen

The main screen is used to display numerous functions of the multifunction gauge.

Refer to *MULTIFUNCTION GAUGE MODES* for the different available modes:

4) Fuel Level Display

Bar gauge continuously indicates the level of fuel in the fuel tank while riding.

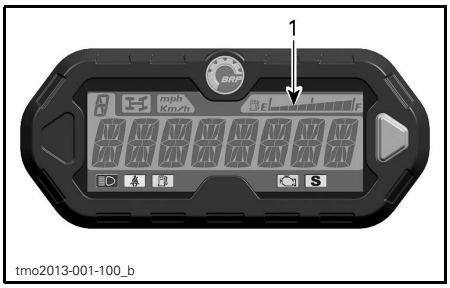

1. *Fuel level display*

5) 4WD Indicator Lamp

When this indicator is ON, it indicates the **4WD** system is activated.

6) Low Fuel Level Indicator Lamp

When this indicator is ON, it indicates that there is approximately 12 L (3.2 U.S. gal.) of fuel left in fuel tank.

7) Check Engine Indicator Lamp

When this indicator is ON, it indicates an engine fault code, look for a message at the LCD display.

When this indicator blinks, it indicates that the **LIMP HOME** mode is activated.

Refer to *TROUBLESHOOTING* section for more details.

8) High Beam Indicator Lamp

When this indicator is ON, it indicates that **high beam** is selected on the headlights and that ignition key is in ON with lights position.

9) KM/H or MPH Indicator Lamp

mph
Km/h

The proper lamp turns on to indicate the unit the speedometer uses.

10) Seat Belt Indicator Lamp

When this indicator is ON, the driver's seat belt is not buckled.

11) Sport Mode Indicator Lamp

S

When this indicator is ON, the sport mode is active.

Multifunction Gauge Modes

Speed Mode

In this mode, the main screen shows the speed of the vehicle either in km/h or in MPH.

vdd2008-001-084

RPM Mode

In this mode, the main screen shows the engine RPM.

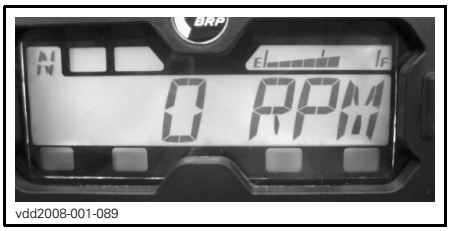

vdd2008-001-089

Combined Mode

In this mode, the main screen shows the speed of the vehicle and the engine RPM.

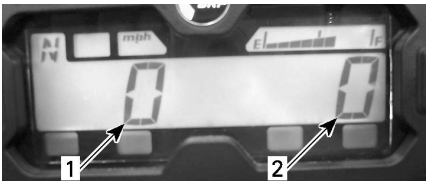

vdd2008-001-085_a

1. *Vehicle speed*
2. *Engine RPM*

Odometer (OD)

Odometer records the total distance travelled either in miles or kilometers.

vsi2009-018-030

Clock

Shows current time.

vmo2011-008-001

Refer to *GAUGE SETUP* to set current time.

Trip Meter (TP)

The trip meter records the travelled distance since it has been reset. Distance travelled is displayed either in kilometers or miles.

vsi2009-018-031

It can be used to establish a fuel tank range or distance between 2 way points.

Press and HOLD the selector button for 2 seconds to reset the trip meter.

Trip Hour Meter (TH)

The trip hour meter records vehicle running time when the electrical system is activated. It can be used to establish traveling time between 2 way points .

vsi2009-018-032

Press and HOLD the selector button for 2 seconds to reset the hour meter.

Engine Hour Meter (EH)

The engine hour meter records engine running time.

vsi2009-018-033

Message Display Mode

Important messages can be displayed in the main screen. Refer to table below.

If an abnormal engine condition occurs, a message may scroll across the main screen in conjunction with a pilot lamp. Refer to *TROUBLESHOOTING* section for details.

MESSAGE (NORMAL OPERATION)	DESCRIPTION
BRAKE	Message displayed when the brakes are applied continuously for 15 seconds. (Speed needs to be higher than 5 km/h (3 MPH))
PERFORMANCE KEY	Displayed at power up when a performance key is used.
WORK KEY	Displayed at power up when the work key is used.
OVERRIDE	Override is displayed when the override switch is pressed and the shift lever is set to reverse gear.
SEAT BELT	When the driver seat belt is not buckled and the vehicle speed is less than 10 km/h (6 MPH), the message is displayed and the pilot lamp will be lit. No engine torque limitation engaged.
ENGINE LIMITATION ENGAGED FASTEN SEAT BELT	When the driver seat belt is not buckled and the vehicle speed is above 10 km/h (6 MPH), the message is displayed and the pilot lamp stays on. The engine management will engage a torque limitation that will limit the vehicle speed to approximately 20 km/h (12 MPH).
DPS MAX.	Maximum steering assist.
DPS MED	Medium steering assist
DPS MIN	Minimum steering assist.
SPORT MODE ACTIVE	Displayed when sport mode is activated.
ECO MODE	Displayed when ECO mode is activated.
MAINTENANCE REQUIRED (1)	Displayed in gauge when vehicle is due for a maintenance.
LOW GEAR	Displayed when belt protection is active in high gear. (If available and activated on your model)

(1) To erase the MAINTENANCE REQUIRED message, proceed as follows:

1. Select PARK.
2. Turn ignition switch to ON. Do NOT start engine.

NOTE: The steps 3 through 9 must be completed within **5 seconds**.

3. Press override switch and HOLD.
4. Press and release brake pedal.
5. Release override switch.
6. Press and release brake pedal.
7. Press override switch and HOLD.
8. Press and release brake pedal.
9. Release override switch.

10. Turn ignition switch to OFF

NOTE: Do not turn ignition switch to ON before the multifunction gauge turns off.

Fault Code Mode

Press and hold mode button while switching high and low beam (three cycles) to access diagnostic fault codes.

Navigating in the LCD Gauge

Default Display Mode

After vehicle startup, the default display mode is either:

– Vehicle speed
– Engine revolutions per minute (RPM)
– Both parameters simultaneously (combined mode).

To change from one display to the other, proceed as follows.

1. Turn ignition key to ON to power-up the system up.
2. Wait until the "greeting message" has been displayed.
3. Press and release selector button once to display OD (odometer).
4. Press the selector button again, this time for 2 seconds.

This will change the Mode to either Speed, RPM or Combined.

vdd2008-001-083

5. To select another mode, repeat steps 3 and 4 until the desired mode is displayed.

Temporary Display Mode

In the temporary display mode, the following functions are available:

– Odometer
– Clock
– Trip meter (resettable)
– Trip Hour meter (resettable)
– Engine hour meter.

Press and release selector button to change the default display mode to the temporary mode.

tmo2011-001-702_c

1. Selector button

The gauge will display the selected mode for 10 seconds then will return to the normal display mode.

While in a resettable mode, push and HOLD selector button for 2 seconds to reset it.

Gauge Setup

Clock Setting

Once clock display as been selected, use the display selector button to set clock as follows:

vmo2011-008-001_a

1. Selector button
2. Time

1. Press and HOLD button (Display will flash).
2. Choose the 12-hour (12H) or 24-hour (24H) format by pressing button.
3. If the 12-hour format was selected, choose Am ("A") or Pm ("P") by pressing button.
4. Press and HOLD button.
5. Choose hour first digit by pressing button.
6. Press and HOLD button.
7. Choose hour second digit by pressing button.
8. Press and HOLD button.
9. Choose minutes first digit by pressing button.
10. Press and HOLD button.
11. Choose minutes second digit by pressing button.
12. Press button to enter settings (CLOCK will appear on display).

NOTE: The gauge will display the current time for 10 seconds then will return to the normal display mode.

Unit Selection (km/h vs MPH)

The speedometer, odometer and trip meter are factory preset in **miles** but it is possible to change them to **kilometer** reading. Contact an authorized Can-Am dealer.

Language Selection

The gauge display language can be changed. Refer to an authorized Can-Am dealer for language availability and setup the gauge to your preference.

MULTIFUNCTION GAUGE (ANALOG/DIGITAL) (XT, XT-P AND LTD MODELS)

Multifunction Gauge Description

The multifunction gauge (analog/digital) is located on the steering column.

The multifunction gauge (analog/digital) is comprised of a digital gauge and two analog gauges (speedometer and tachometer).

The engine temperature and fuel level bar graphs are comprised in the digital gauge.

The indicators lamps are comprised in both analog gauges.

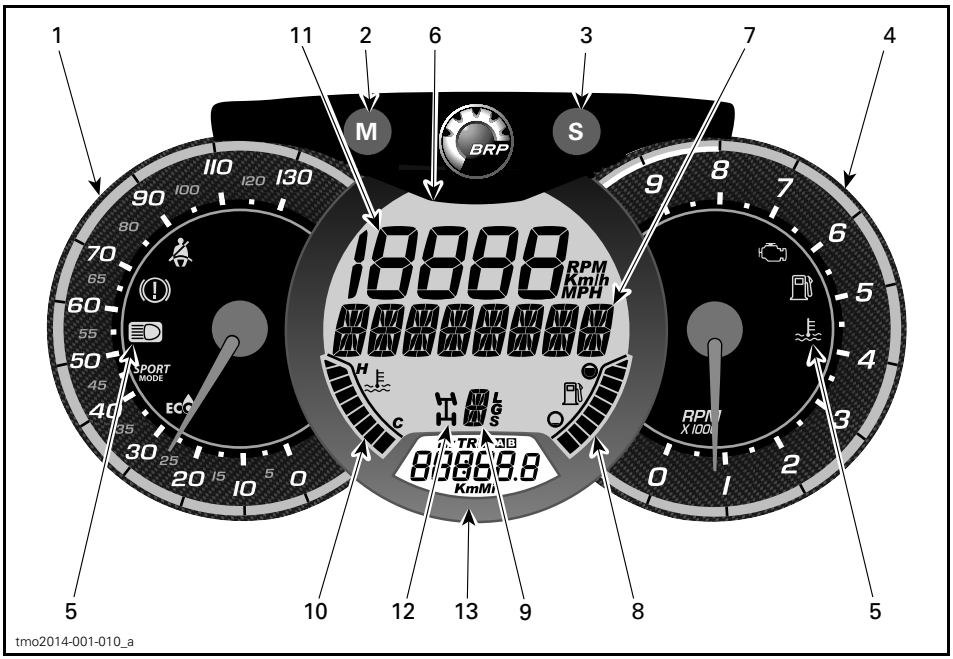

⚠ WARNING

Do not adjust the display while riding. You could lose control.

1) Analog Speedometer

Measures vehicle speed in km/h or mph.

2) MODE (M) Button

Pressing the MODE (M) button will scroll through the functions of the main digital display.

FUNCTION SEQUENCE	OPTIONS
Air Suspension (LTD model only)	Press ACS switch to change setting (1 to 6)
Numerical Display is flashing	Press SET (S) to scroll and select desired function and press MODE (M) to confirm
Multifunction display is flashing	Press SET (S) to scroll and select desired function and press MODE (M) to confirm

3) SET (S) Button

Pressing the SET (S) button will scroll through the functions of the secondary digital display.

FUNCTION SEQUENCE	INFORMATION DISPLAYED
Clock	XX:XX (24:00 time base) XX:XX A or P (12:00 AM/PM time base)
Cumulative distance odometer	XXXXX.X km or mi
Trip distance — odometer A (TRIP A)	XXXXX.X km or mi
Trip distance — odometer B (TRIP B)	XXXXX.X km or mi
Engine time chronometer (Hr)	XXXXX.X
Trip time chronometer (HrTRIP)	XXXXX.X

To reset any trip functions, push and hold the SET (S) button for three seconds.

4) Analog Tachometer (RPM)

Measures engine revolutions per minute (RPM). Multiply by 1000 to obtain actual revolutions.

5) Indicator Lamps

Indicator lamps will inform you of various conditions or problems.

An indicator lamp can flash alone or in combination with another lamp.

INDICATOR LAMP(S)		DESCRIPTION
All indicator lamps	On	All indicator lamps are activated when ignition switch is ON and the engine is not started
	On	Low fuel
	On	Check engine
	On	High engine temperature
	On	Headlights in the HIGH beam position
	On/Flash	Operator seat belt is not properly latched. Engine output will be limited, reducing the speed and operability of the vehicle. Main digital display: FASTEN SEAT BELT
SPORT MODE	On	Sport mode activated
ECO	On	ECO mode activated

6) Main Digital Display

Displays useful real-time information to the rider.

7) Multifunction Display

The vehicle speed or the engine revolutions (RPM) can be displayed. See *MODE (M) BUTTON* in this section.

Important messages can also be displayed. Refer to table below.

If an abnormal engine condition occurs, a message can be combined with a pilot lamp. Refer to *TROUBLESHOOTING* section for details.

MESSAGE	DESCRIPTION
BRAKE	Message displayed when the brakes are applied continuously for 15 seconds. (Speed needs to be higher than 5 km/h (3 MPH))
PERFORMANCE KEY	Displayed at power up when a performance key is used.
WORK KEY	Displayed at power up when the work key is used.
OVERRIDE	Override is displayed when the override switch is pressed and the shift lever is set to reverse gear.
SEAT BELT	When the driver seat belt is not buckled and the vehicle speed is less than 10 km/h (6 MPH), the message is displayed and the pilot lamp will be lit. No engine torque limitation engaged.
ENGINE LIMITATION ENGAGED FASTEN SEAT BELT	When the driver seat belt is not buckled and the vehicle speed is above 10 km/h (6 MPH), the message is displayed and the pilot lamp stays on. The engine management will engage a torque limitation that will limit the vehicle speed to approximately 20 km/h (12 MPH).
DPS MAX.	Maximum steering assist.
DPS MED	Medium steering assist
DPS MIN	Minimum steering assist.
SPORT MODE ACTIVE	Displayed when sport mode is activated.
ECO MODE	Displayed when ECO mode is activated.
MAINTENANCE REQUIRED(1)	Displayed in gauge when vehicle is due for a maintenance.
LOW GEAR	Displayed when belt protection is active in high gear. (If available and activated on your model)

(1) To erase the MAINTENANCE REQUIRED message, proceed as follows:

1. Select PARK.
2. Turn ignition switch to ON. Do NOT start engine.

NOTE: The steps 3 through 9 must be completed within **5 seconds**.

3. Press override switch and HOLD.
4. Press and release brake pedal.
5. Release override switch.
6. Press and release brake pedal.
7. Press override switch and HOLD.
8. Press and release brake pedal.
9. Release override switch.
10. Turn ignition switch to OFF

NOTE: Do not turn ignition switch to ON before the multifunction gauge turns off.

8) Fuel Level Indicator

Bar graph that continuously indicates the level of fuel left in the fuel tank.

As a second function, the bar graph will indicate the ACS setting when the ACS is in manual mode.

9) Gearbox Position Indicator

Displays the selected gearbox position.

As a second function, will indicate the current ACS position setting in automatic and manual modes.

10) Engine Temperature Indicator

Bar graph that continuously indicates the engine coolant temperature.

As a second function, the bar graph will indicate the ACS setting when the ACS is in manual mode.

11) Numerical Display

The vehicle speed or the engine revolutions (RPM) can be displayed. See *MODE (M) BUTTON* in this section.

12) 2WD/4WD Indicator

When this indicator is ON, the 4WD system is activated.

13) Secondary Digital Display

Displays useful real time information to the rider. For display function informations, refer to *SET (S) BUTTON*.

Gauge Setup

Setting Metric/Imperial Units

See a Can-Am dealer for adjustments.

Setting Clock

1. Press MODE (M) button to select clock display.
2. Push and hold MODE (M) button for three seconds.
3. Press MODE (M) button to select 12:00 AM PM or 24:00 time base.
4. If 12:00 AM PM time base is selected, A or P flashes. Press MODE (M) button to select A (AM) or P (PM).
5. Press SET (S) button to change hours.
6. Press MODE (M) button to switch to minutes (minutes flash).
7. Press SET (S) button to change minutes.
8. Press MODE (M) button.

Setting Language

The gauge display language can be changed. Refer to an authorized Can-Am dealer for language availability and setup the gauge to your preference.

NOTE: Some vehicle safety labels are not shown on illustrations. For information on vehicle safety labels, refer to *VEHICLE SAFETY LABELS* subsection.

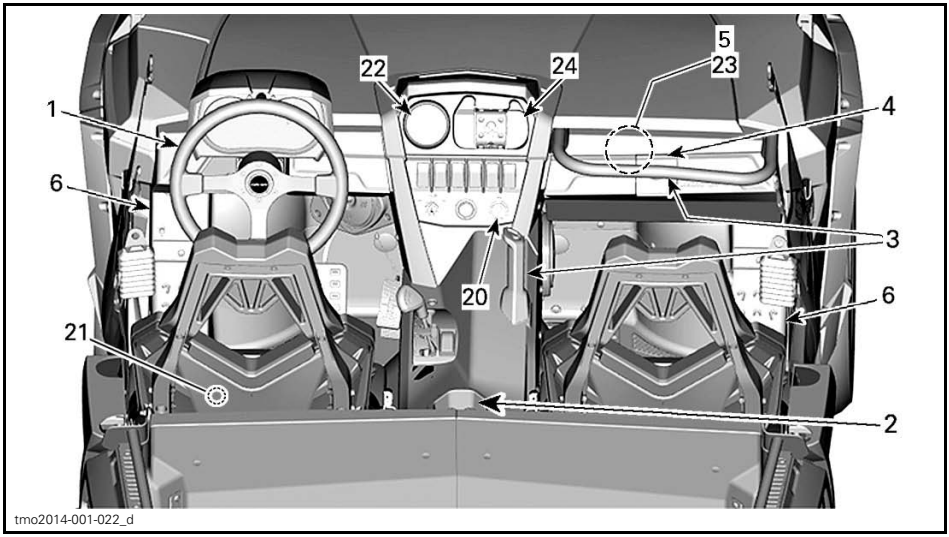

TYPICAL

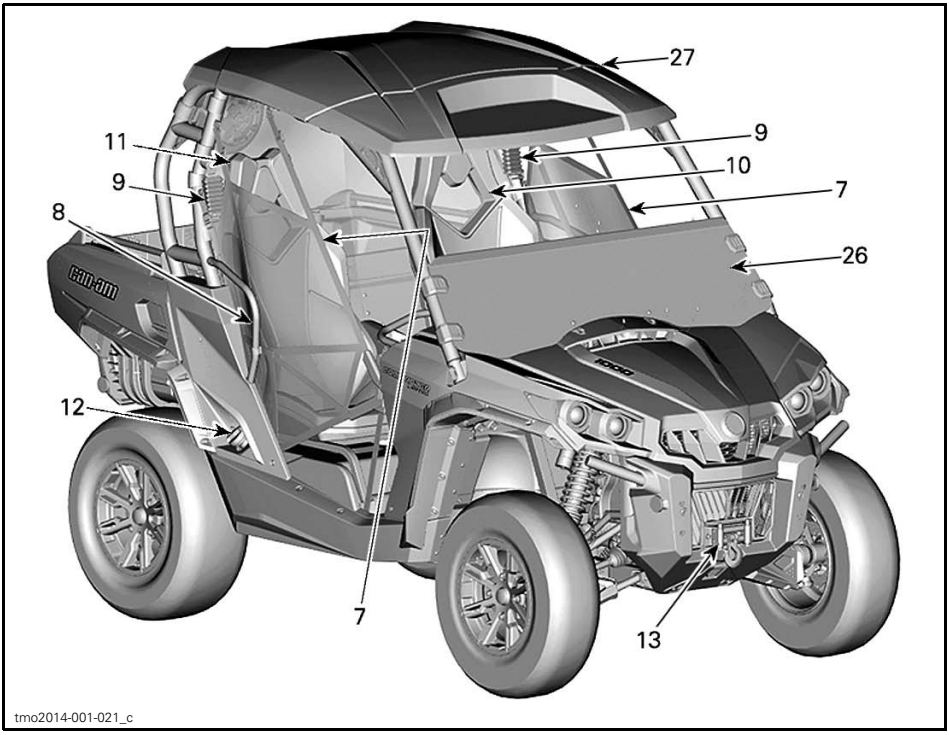

TYPICAL

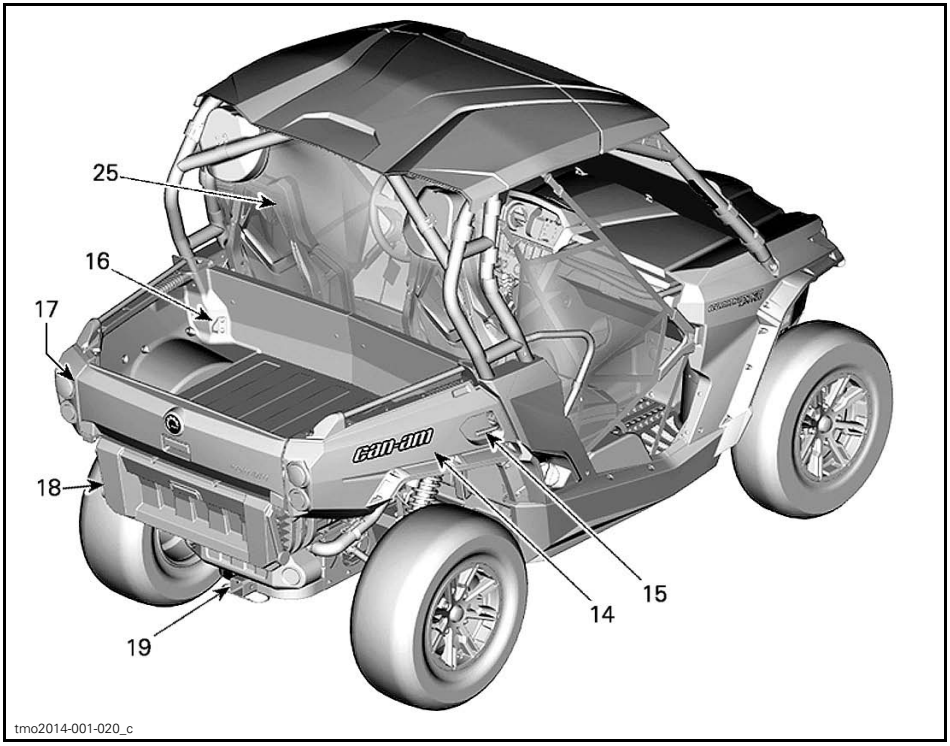

TYPICAL

1) Tilt Steering

The steering wheel height is adjustable.

Adjust the steering wheel height to face your chest, not your head.

To adjust steering wheel height:

1. Unlock steering by pulling the tilt lever toward you.
2. Move steering wheel to the desired position.
3. Release tilt lever to lock steering wheel in position.

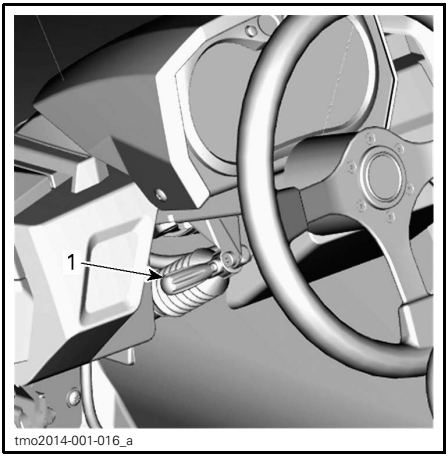

1. Tilt lever

⚠ WARNING

Never adjust the steering wheel height while riding. You may lose control.

2) Cup Holders

Two cup holders are located at the rear of the lower console.

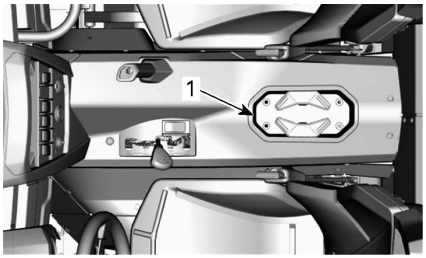

tmo2014-001-017_a

1. Cup holders

NOTE: Do not use cup holders while riding in rough conditions.

3) Passenger Handholds

The passenger has access to a front handhold located in front of seat above glove box.

A left hand handhold located in the center of the vehicle on the lower console is also accessible.

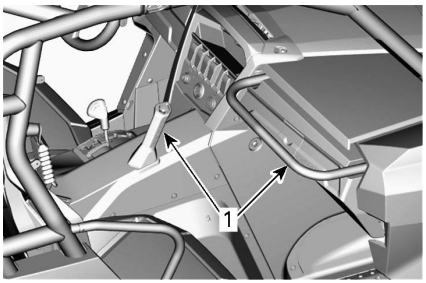

tmo2014-001-018_a

1. Passenger handholds

Holding the handholds helps the passenger brace against the movement of the vehicle and helps keep hands and body inside the cockpit in the event of a rollover.

⚠ WARNING

Never use any part of vehicle cage as handholds. Hands can be struck by objects outside the cockpit or crushed in a rollover.

4) Glove Box

The vehicle is equipped with a closed glove box made to carry light objects.

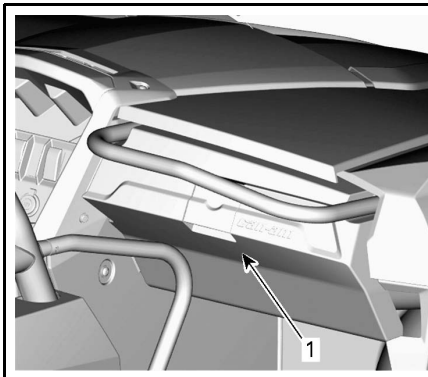

tmo2014-001-015_a

1. Glove box latch

GLOVE BOX CAPACITY	
MAXIMUM LOAD	5 kg (11 lb)

5) Tool Kit

A tool kit with basic tools is provided. It is located in the glove box.

6) Footrests

The vehicle is equipped with driver and passenger footrests to allow firmly planting feet on vehicle floor, which helps to maintain proper body position while riding.

The footrests help minimize the risk of leg or foot injury.

Always wear appropriate footwear. See *RIDING GEAR* subsection.

7) Side Nets

A side net is provided on each side of the cockpit to help arms, legs or shoulders stay inside the vehicle, thus reducing the risk of injuries. Side Nets may also keep brush or debris out of cockpit.

⚠ WARNING

Never operate the vehicle unless both side nets are in place and buckled.

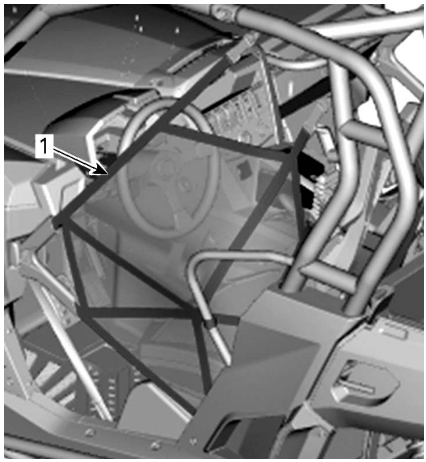

tmo2014-001-003_a

1. Side net

Side nets are adjustable and must be kept as tight as possible. To adjust side nets proceed as follows:

1. Secure side net with buckle.
2. Pull on three adjustment straps to tighten.

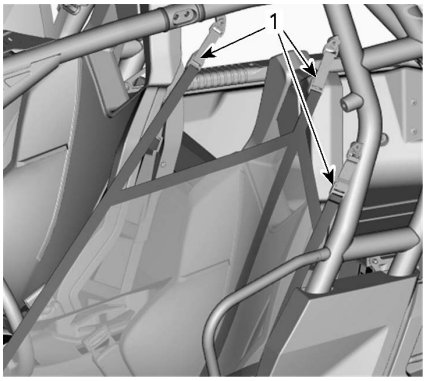

tmo2014-001-004_a

1. Adjustment straps

8) Shoulder Guards

The vehicle is equipped with shoulder guards to help restrain the entire body of driver and passenger inside vehicle.

9) Seat Belts

This vehicle is equipped with 3 points seat belts to help protect driver and passenger in the event of collisions, rollovers, or tipovers and to help keep driver and passenger in the cockpit.

⚠ WARNING

Wear seat belts properly at all times. Seat belts reduce the risk of injury in a crash and help keep limbs inside the cockpit in a rollover or any accidents.

If driver's seat belt is not fastened when:

– The ignition is turn ON, the seat belt indicator lamp will flash.
– The engine is started and shift lever is moved out of PARK, vehicle speed will be limited to a maximum of approximately 20 km/h (12 MPH) on flat ground.

⚠ WARNING

The vehicle may reach higher or lower speed depending on inclines.

To remind you to fasten the seat belt, the multifunction gauge will display the following message: ENGINE LIMITATION ENGAGED FASTEN SEAT BELT.

⚠ WARNING

There is no indicator light or message for the passenger seat belt. The driver is responsible for the passenger safety and should ensure the passenger buckles the seat belt.

Fastening and Adjusting the Seat Belt

The seat belt is equipped with a slide locking tab.

tmr2014-037-005_a

SEAT BELT ENGAGED
1. Slide locking tab

Insert the seat belt latch plate into the buckle, then pull the belt to ensure it is properly fastened.

To lock: adjust the seat belt tightly against your body and raise or move the lap belt upward.

tmr2014-037-003_a

⚠ WARNING

Wear seat belt properly. Make sure it is not twisted or defective.

To unlock: place seat belt as shown and push down on the lap belt where indicated.

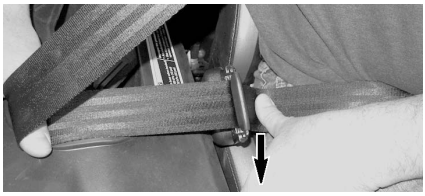

tmr2014-037-004_a

To release the seat belt, push on the red button on the seat belt buckle.

10) Driver's Seat

The driver's seat can be adjusted forward and backward.

To adjust seat, move the seat lever to unlock the seat. Release the lever to lock the seat into desired position.

⚠ WARNING

Never adjust the seat position while driving.

The driver's seat can be removed easily:

– Tilt seat forward by releasing latch between seat cushion and backrest.
– Pull seat upwards.

All Models Except LTD

A convenient storage compartment is located under the driver's seat.

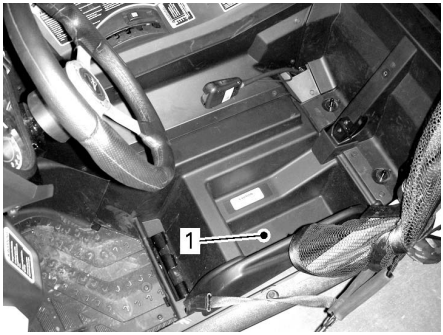

tmo2011-001-700_a

1. *Storage compartment*

LTD Models

The ACS compressor is located under the driver's seat.

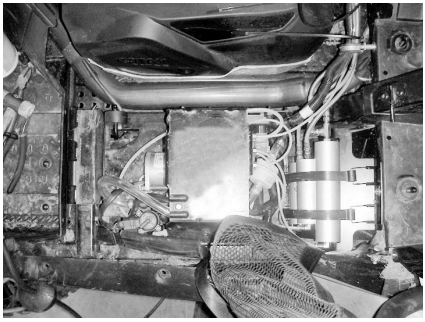

tmo2012-003-210

ACS COMPRESSOR

11) Passenger Seat

The passenger seat is not adjustable.

The passenger seat can be tilted forward for removal by releasing the latch located between the seat cushion and the backrest. Once tilted forward the seat can be removed by pulling upwards.

12) Fuel Reservoir Cap

The fuel reservoir cap is located on the right hand side of the vehicle behind the passenger seat.

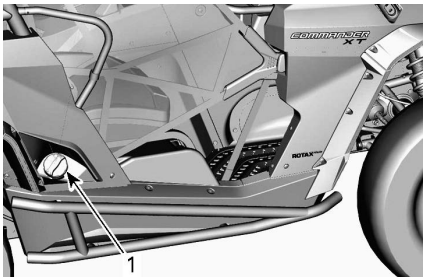

tmo2014-001-019_a

1. *Fuel reservoir cap*

Refer to *FUEL* subsection for information on fueling procedure and fuel requirements.

13) Winch (Models with Winch)

The winch can be actuated inside the vehicle using the winch control switch on the upper console.

tmo2011-001-024

WINCH

Refer to your *BASIC GUIDE TO WINCHING TECHNIQUES* manual included with your vehicle for winch operation.

14) Cargo Box

The vehicle is equipped with a 2 level inclinable cargo box. The cargo box may be used for various types of cargo.

⚠ WARNING

To reduce the risk of loss of control or loss of load, use the cargo box only in accordance with *CARRYING LOADS* in the *SAFETY INFORMATION* section.

The cargo box is split into an upper and lower sections to provide more compartments for carrying separate loads.

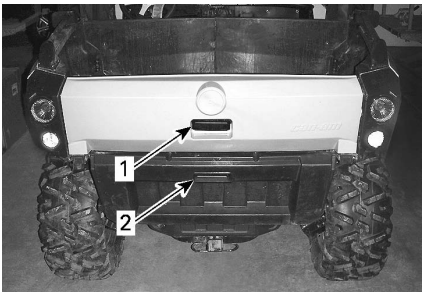

tmo2011-001-007_a

1. *Cargo box upper section*
2. *Cargo box lower section*

The floor separating both sections can be easily removed to make a single cargo area. Both the upper and lower tailgates must be opened to allow the floor separator to be removed.

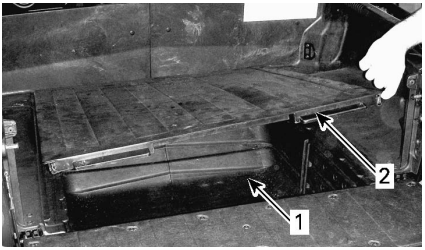

tmo2011-001-013_a

1. *Increased cargo volume*
2. *Floor/Separator*

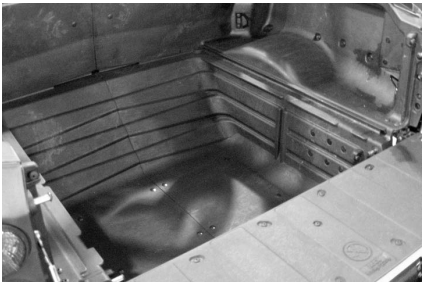
tmo2011-001-014

CARGO AREA WITHOUT FLOOR/SEPARATOR

The lower section can be further split into two subsections by inserting a plywood piece into the vertical slots.

15) Cargo Box Tilt Release Handles

The latching mechanism of the cargo box can be actuated from either side of the vehicle through a release handle.

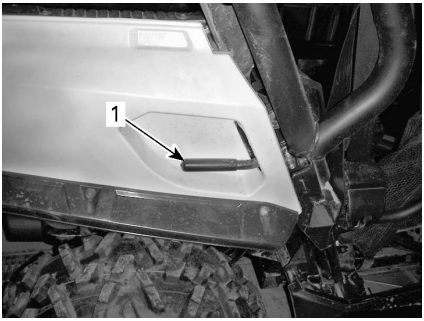

tmo2011-001-020_a

1. *Cargo box release handle*

Refer to *CARRYING LOADS* in the *SAFETY INFORMATION* section.

16) Anchoring Hooks

To provide anchoring point in order to secure cargo inside the cargo box, 4 anchoring hooks are located inside the cargo area.

17) Upper Tailgate

The upper section of the cargo box can be closed with a tailgate.

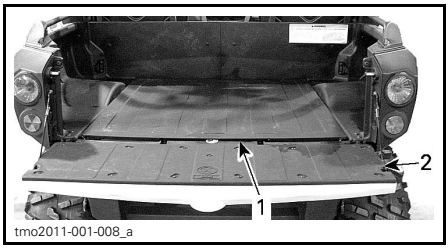

CARGO BOX UPPER SECTION
1. *Floor section separator*
2. *Upper tailgate*

NOTICE **Do not exceed 100 kg (220 lb) of weight on the upper tailgate during loading or unloading. Always close the upper tailgate before operating to reduce the risk of loss of load.**

Upper Tailgate Removal

The upper tailgate can easily be removed by inclining and pulling out of hinges, then removing the retaining cables.

1. *Upper tailgate hinge*

18) Lower Tailgate

The lower section of the cargo box has a lower tailgate.

LOWER SECTION WITH LOWER TAILGATE

The upper tailgate must be closed in order to open or close the lower tailgate.

1. *Lower tailgate*
2. *Lower section*

NOTICE **Do not exceed 100 kg (220 lb) of weight on the lower tailgate during loading or unloading. Always close the lower tailgate before operating to reduce the risk of loss of load.**

19) Hitch support

The vehicle comes equipped with a 51 mm x 51 mm (2 in x 2 in) box size standard hitch support.

For the proper usage of the hitch support, refer to *MOVING LOADS AND DOING WORK* in the *SAFETY INFORMATION* section.

⚠ WARNING

To reduce the risk of loss of control or loss of load, always respect the maximum hauling capacity.

20) 12-Volt Power Outlet

Convenient for handheld spotlight or other portable equipment.

1. 12 V power outlet

Remove protective cap to use. Always reinstall it after use to protect against weather.

Do not exceed the rating capacity. Refer to *SPECIFICATIONS* subsection.

21) ACS Compressor (LTD Models Only)

The ACS compressor main function is to provide air pressure for the suspensions. Refer to *SUSPENSION* subsection for more details.

The ACS compressor may be also used as a convenient feature to inflate your Commander tires.

NOTE: The engine must be running to allow for the compressor to start.

NOTICE **Do not use the ACS compressor for more than 2 minutes to avoid overheating.**

To inflate tires, proceed as follows:

1. Ensure that the shift lever is set in PARK position.
2. Start engine and let it run at idle.
3. Remove seat.
4. Connect supplied hose located in the glove box into the compressor fitting.

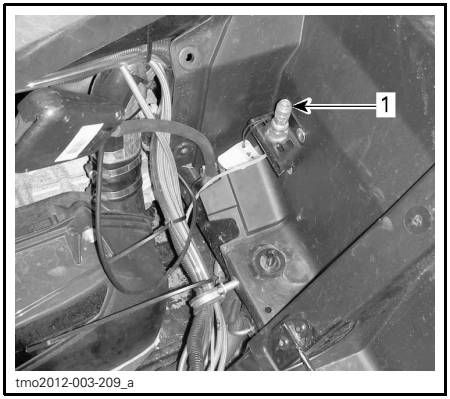

1. Compressor fitting

5. Inflate tire.

NOTE: For your convenience, a pressure gauge is supplied in tool kit.

⚠ WARNING

Always inflate tires to recommended air pressure.

22) Radio (LTD Models Only)

The radio controls are located in the upper console.

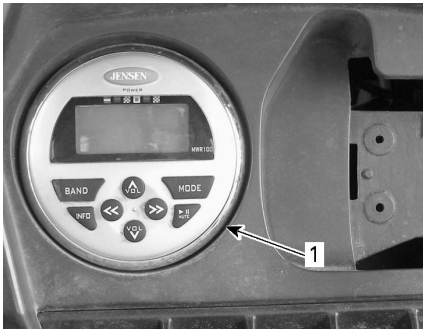

tmo2012-003-208_a

TYPICAL
1. *Radio controls*

⚠ WARNING

- Adjusting radio or reading radio display can distract from the operation of the vehicle, particularly from constantly scanning the environment.
- Before adjusting radio or reading radio display, ensure your environment is clear and free from obstacle, and bring the vehicle to a low speed.

Refer to radio owner manual for operating instruction.

23) Radio AUX Output (LTD Models Only)

These sockets are used to connect portable audio devices.

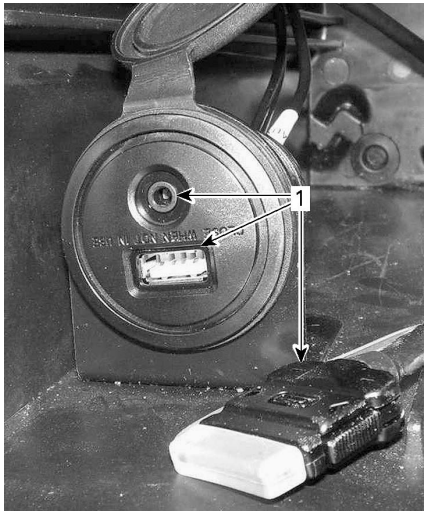

tmo2012-003-852_a

INSIDE GLOVE BOX
1. *Portable audio device sockets*

Refer to radio owner manual for operating instruction.

24) GPS Receiver (Global Positioning System) (LTD Models Only)

The GPS receiver is located on the upper control console.

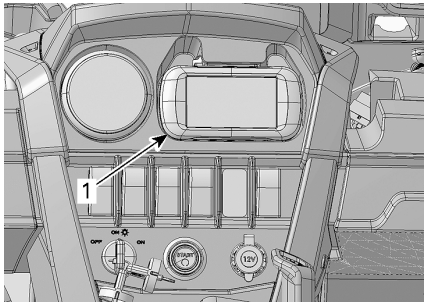

tmo2012-003-802_a

TYPICAL
1. *GPS receiver*

⚠ WARNING

- Reading the GPS receiver can distract from the operation of the vehicle, particularly from constantly scanning the environment.
- Before reading the GPS receiver, ensure your environment is clear and free from obstacle, and bring the vehicle to a low speed.

The GPS receiver is powered via the vehicle electrical system when installed on its support (with ignition switch to ON position), or via batteries when removed from its support.

GPS receiver can be activated using the ON/OFF button on the receiver or with the vehicle ignition switch when turned to ON or OFF position (when installed on the vehicle).

The following is provided with the GPS receiver:

- Lithium-ion battery pack
- USB cable
- AC charger
- Owner's manual on disk
- Quick start manual.

NOTE: Always refer to manufacturer's documentation supplied with the GPS receiver for proper use.

NOTE: For more details about the GPS receiver, available maps or accessories, contact an authorized Can-Am dealer or visit **Garmin** website at **www.garmin.com**.

⚠ WARNING

Remember, the data provided by the GPS receiver is for reference only. For your safety, NEVER rely solely on this information.

GPS Receiver Installation

Insert GPS receiver onto the lower tab of support.

Lock GPS receiver onto its support by pushing it towards locking tab.

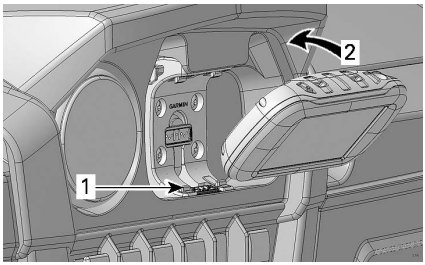

tmo2012-003-800_a

1. *Lower tab*
2. *Push toward locking tab*

NOTICE **To prevent weather damage or theft to your GPS receiver, always remove it from its support when leaving the vehicle.**

GPS Receiver Removal

Push on locking tab to release GPS.

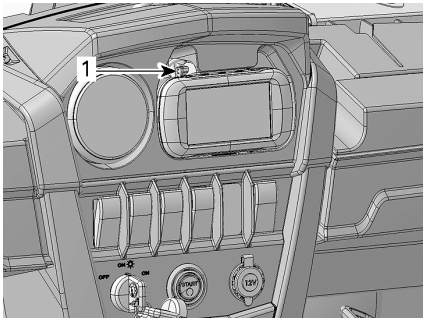

tmo2012-003-803_a

1. *Locking tab*

25) Rear Net (LTD Models Only)

The vehicle comes equipped with a rear net.

Rear Net Removal

Undo straps securing rear net to cage.

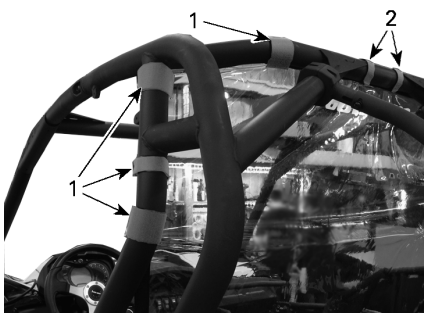

tsi2014-012-001_a

VELCRO ® FLAP LOCATIONS (TYPICAL : MAVERICK SHOWN)
1. *LH side VELCRO® flap location*
2. *Center VELCRO® flap location*

Remove rear fasteners from cage junction.

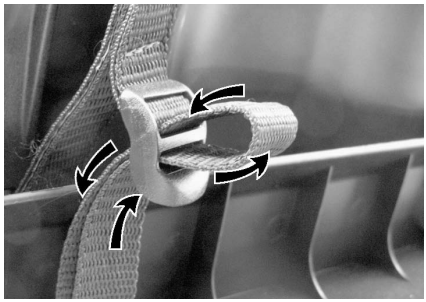
tsi2014-035-002_b

Remove and keep screw, washer and nut located on the lower section of net.

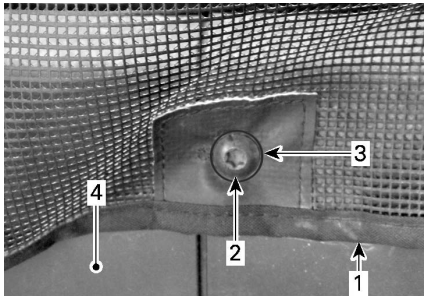

tmo2015-001-301_b

LH BULKHEAD
1. *Rear wind screen*
2. *Bulkhead retaining screw*
3. *Washer*
4. *LH rear bulkhead*

Remove rear net.

Reinstall screw, washers and nut located on the lower section of net.

Rear Net Installation

Installation is the reverse of the removal. However pay attention to the following.

Torque retaining nut to specification.

TORQUE	
Retaining nut	7.5 N•m ± 1.0 N•m (66 lbf•**in** ± 9 lbf•**in**)

26) Half Windshield (LTD and Mossy Oak Models Only)

The vehicle comes equipped with a half windshield.

Half Windshield Removal

1. Undo the 4 straps securing half windshield to the cockpit tubular structure.

tsi2011-009-009

2. Remove and keep retaining nut, washer and screw securing windshield to bracket.

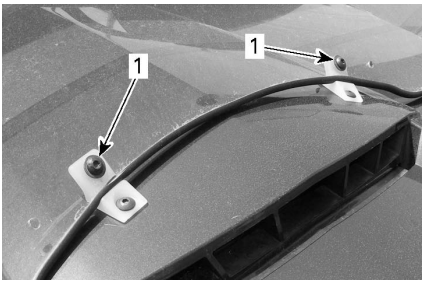

tmo2012-003-202_a

1. *Retaining screw securing windshield to bracket*

3. Remove windshield from vehicle.

NOTICE **Make sure half windshield is resting on a clean non abrasive surface with the interior facing up.**

Half Windshield Installation

Install windshield onto vehicle, making sure screw holes in the lower section of windshield align with bracket holes.

Fasten the 4 straps.

tsi2011-009-009

Install retaining screws in windshield and torque retaining screws to specification.

TORQUE	
Retaining screw	2.5 N•m ± .5 N•m (22 lbf•**in** ± 4 lbf•**in**)

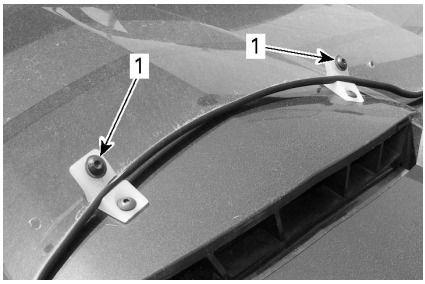

tmo2012-003-202_a

1. *Brackets with retaining screws and washers installed*

27) Full Roof (LTD and Mossy Oak Models Only)

The vehicle comes equipped with a full roof.

Full Roof Removal

1. Remove top mid section.
   1.1 Undo rear straps securing top mid section to cage.

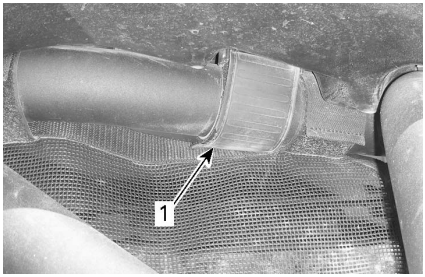

tmo2012-003-214_a

RH SIDE SHOWN
1. *Rear strap*

   1.2 Undo lateral straps securing top mid section to cage.

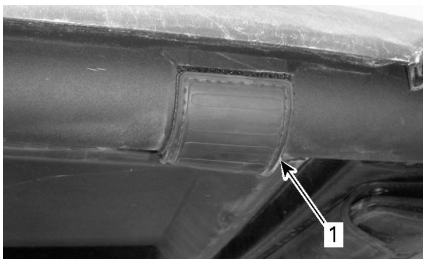

tmo2012-003-212_a

RH SIDE SHOWN
1. Lateral strap

1.3 Remove top mid section from vehicle.

2. Remove sport visor from vehicle.

2.1 Remove and keep screws securing front of sport visor clamps to cage.

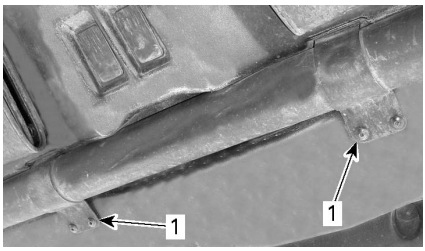

tmo2012-003-205_a

SPORT VISOR FRONT CLAMPS
1. Clamps secured with screws

2.2 Remove and keep screws securing sides of sport visor clamps to cage.

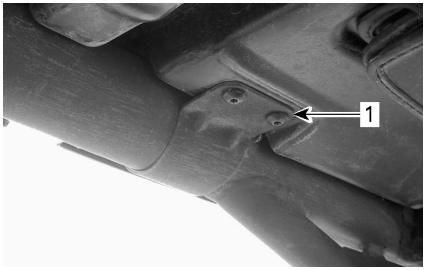

tmo2012-003-215_a

RH SIDE SHOWN
1. Lateral clamp secured with screws

2.3 Undo clamps and remove sport visor from vehicle.

NOTE: Top mid section needs to be removed before sport visor.

Full Roof Installation

Installation is the reverse of removal. However pay attention to the following.

TORQUE	
Roof clamps retaining screws	2.5 N•m ± .5 N•m (22 lbf•**in** ± 4 lbf•**in**)

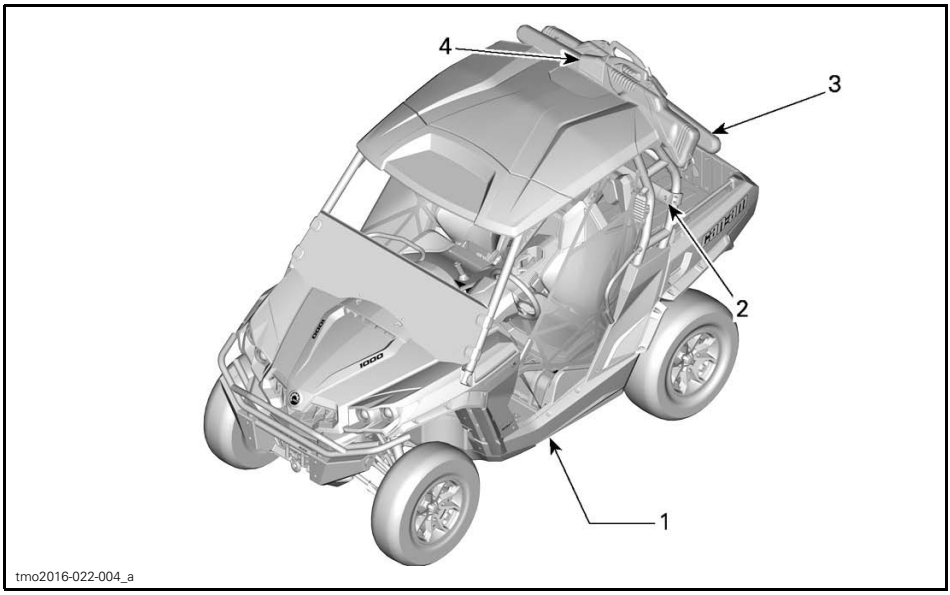

1) Full Underbody Aluminum Skid Plate

Aluminum plates provide essential protection.

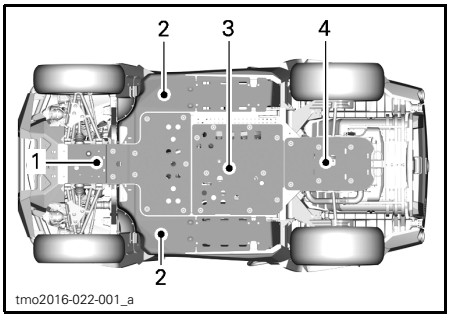

1. *Front skid plate*
2. *Lateral skid plate*
3. *Central skid plate*
4. *Rear skid plate*

2) Gear Rail

This stationary rail system is mounted on your roll bar behind the drive and passenger seats and can be used to mount accessories ranging from gear grips, fuel packs, gun boots, gun boot mounts and universal saw press.

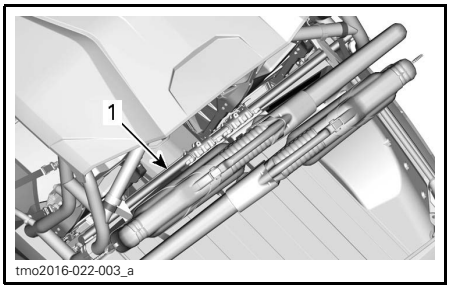

1. *Gear rail*

3) Gun Boot

This easy access gun boot is designed to accommodate a variety of rifle and shotguns along with their mods.

⚠ WARNING

Make sure firearm is unloaded and rendered inoperable by means of a secure locking device prior to inserting it in the Gun Boot

NOTE: Before using the Gun Boot to transport firearms, always verify with local law enforcement for specific laws regulating the use and transportation of gun boots and firearms.

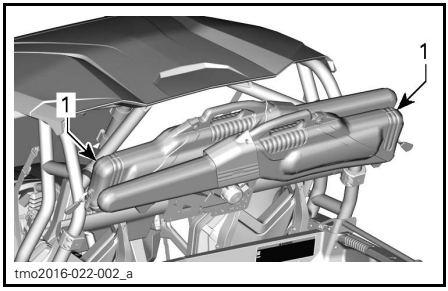

1. *Gun boot*

⚠ WARNING

Reduce your speed while firearm case is installed on vehicle.

NOTICE Ensure Gun Boot is centered on vehicle. Loosen C-Clamp knob as needed and center firearm assembly.

NOTICE To ensure firearm stability in gun boot, align Gun Boot horizontally with gear rail.

NOTICE Avoid areas with a lot of branches. If avoiding such areas is impossible, make sure branches do not hit the firearm case.

Installing Gun Boot Into Gun Boot Mount

Install gun boot into gun boot mount.

Secure case using locking pins.

Insert pin into lower section of gun boot.

Install lock onto pin.

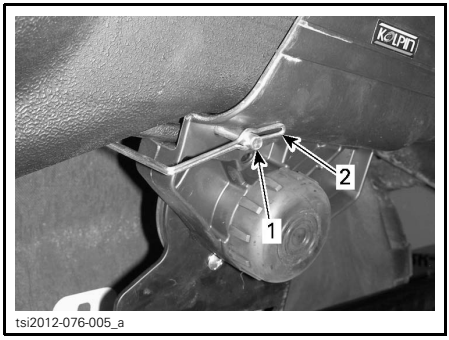

1. *Pin*
2. *Lock*

Insert pin into upper section of gun boot.

Install lock onto pin.

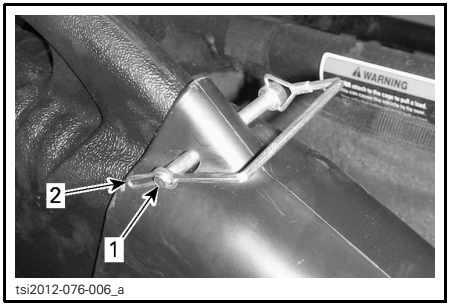

1. *Pin*
2. *Lock*

Close rear section.

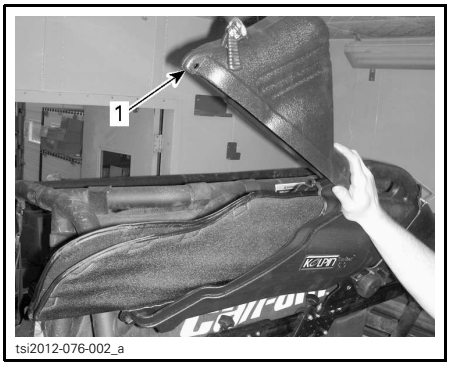

SINGLE GUN BOOT MOUNT DISPLAYED
1. *Rear section*

Secure rear section of gun boot using locking pin.

Insert pin into rear section of gun boot.

Install lock onto pin.

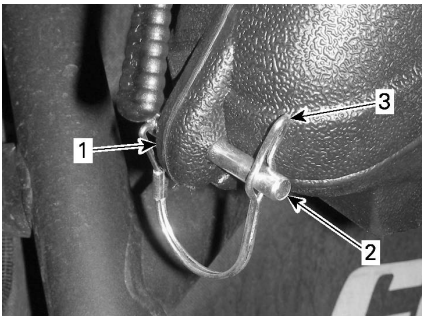

tsi2012-076-004_a

1. *Rear section of Gun Boot*
2. *Pin*
3. *Lock*

CAUTION Gun Boot must never be installed inclined on the grip side. It should be installed horizontally.

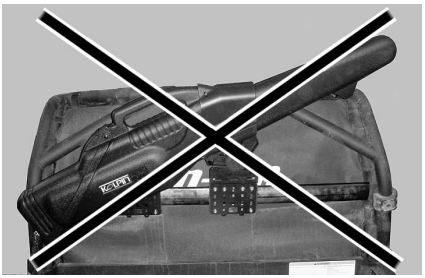
tsi2012-076-753_a

NEVER INSTALL INCLINED ON THE GRIP SIDE - SINGLE GUN BOOT MOUNT DISPLAYED

4) Gun Boot Mount

This lightweight and extremely durable gun boot mount is easily adjustable and allows for precision gun angling adjustability.

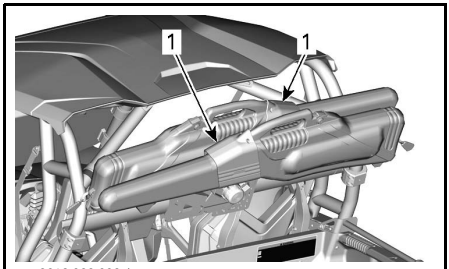

tmo2016-022-002_b

1. *Gun boot mount*

NOTICE Ensure knob of gun boot mount is properly tightened before moving vehicle.

Adjusting Gun Boot Mount Location

Loosen handle located on C-clamp to adjust assembly to desired location.

tsi2012-090-017

TIGHTENING C-CLAMP HANDLE

Tighten handle on C-clamp to secure into place.

NOTICE Ensure knob of gun boot mount is properly tightened before moving vehicle.

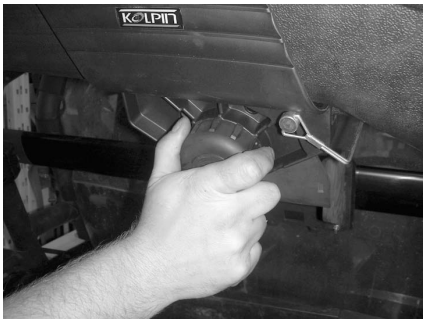

tsi2012-090-024

TIGHTENING GUN BOOT MOUNT KNOB

Suspension Adjustment Guidelines

Your vehicle handling and comfort depend upon suspension adjustments.

⚠ WARNING

Suspension adjustment could affect vehicle handling. Always take time to familiarize yourself with the vehicle's behavior after any suspension adjustment has been made.

Choice of suspension adjustments vary with vehicle load, personal preference, riding speed and terrain condition.

The best way to set up the suspension, is to start from factory settings, then customize each adjustment one at a time.

Front and rear adjustments are interrelated. It may be necessary to readjust the rear shock absorbers after adjusting front shock absorbers for instance.

Test run the vehicle under the same conditions; trail, speed, load, etc. Change one adjustment and retest. Proceed methodically until you are satisfied.

Suspension Factory Settings

FRONT SUSPENSION FACTORY SETTINGS		
ADJUSTMENT	MODEL	FACTORY SETTING
Spring preload	Base DPS XT Mossy Oak	Cam position 1 (soft)
	XT-P	96.3 mm (3.79 in)
	LTD	ACS 1
Compression damping (low speed)	XT-P	12 positions
	LTD	10 positions
Compression damping (high speed)	XT-P	12 positions
Rebound damping	XT-P	12 positions

REAR SUSPENSION FACTORY SETTINGS		
ADJUSTMENT	MODEL	FACTORY SETTING
Spring preload	Base DPS XT Mossy Oak	Cam position 1 (soft)
	XT-P	45.8 mm (1.8 in)
	LTD	ACS 1
Compression damping (low speed)	XT-P	12 positions
	LTD	10 positions
Compression damping (high speed)	XT-P	12 positions
Rebound damping	XT-P	12 positions

Suspension Adjustments

Spring Preload Adjustment (All Models Except LTD)

Shorten the spring for a firmer ride and rough riding condition or when pulling a trailer.

Lengthen the spring for a softer ride and smooth riding condition.

⚠ WARNING

The left and right shock adjustment on front or rear suspension must always be set to the same position. Never adjust one shock only. Uneven adjustment can cause poor handling and loss of stability, which could lead to an accident.

Lift the vehicle. Spring length should be measured without load on the wheels.

Spring length should be equal on both sides.

NOTE: Spring preload affects ground clearance.

All Models Except XT-P

Adjust by turning adjusting cam. Use tool from vehicle tool kit.

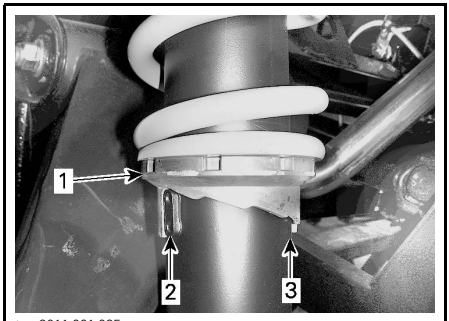

tmo2011-001-065_a

TYPICAL
1. *Turn adjusting cams*
2. *Smooth adjustment*
3. *Hard adjustment*

XT-P Model

Adjust by loosening lock ring and turning adjuster ring accordingly. Use tool from vehicle tool kit.

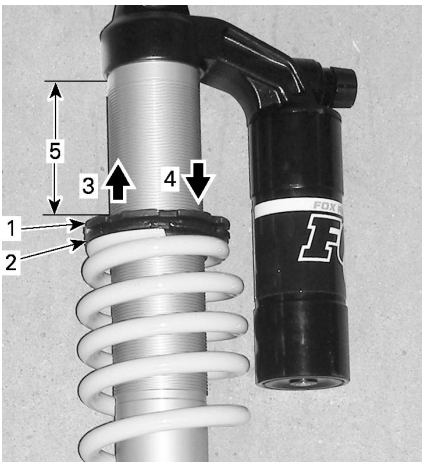

tbl2013-009-046_b

TYPICAL
1. *Loosen top lock ring*
2. *Turn adjuster ring as necessary*
3. *To soften preload*
4. *To stiffen preload*
5. *Dimensions to measure*

Shock Damping Adjustments (XT-P and LTD Models)

Low Speed Compression Damping

Low speed compression damping controls how the shock absorber reacts to a low suspension velocity (slow compression strokes, in most cases when riding at lower speeds).

ACTION	RESULT ON BIG BUMPS
Increasing low speed compression damping force	Firmer compression damping (slow compression)
Decreasing low speed compression damping force	Softer compression damping (slow compression)

Use a flat screwdriver to adjust it.

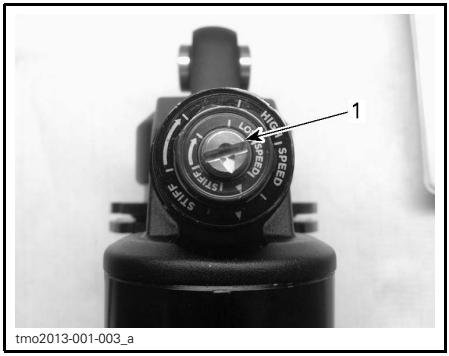

tmo2013-001-003_a

TYPICAL - XT-P MODEL
1. *Low speed compression adjuster*

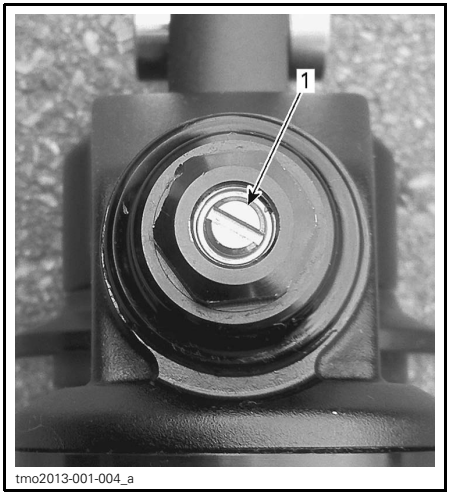

tmo2013-001-004_a

TYPICAL - LTD MODEL
1. *Low speed compression adjuster*

Turning it clockwise (H) **increases** shock damping action (stiffer).

Turning it counterclockwise (S) **decreases** shock damping action (softer).

High Speed Compression Damping (XT-P Model)

High speed compression damping controls how the shock absorber reacts to a high suspension velocity (quick compression strokes, in most cases when riding at higher speeds).

ACTION	RESULT ON SMALL BUMPS
Increasing high speed compression damping force	Firmer compression damping (fast compression)
Decreasing high speed compression damping force	Softer compression damping (fast compression)

Use a 17 mm wrench to adjust it.

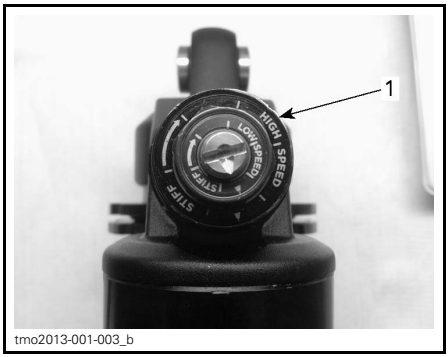

tmo2013-001-003_b

TYPICAL
1. *High speed compression adjuster (17 mm socket)*

Turning it clockwise (H) **increases** shock damping action (harder).

Turning it counterclockwise (S) **decreases** shock damping action (softer).

Rebound Damping (XT-P Model)

Use a flat screwdriver to adjust it.

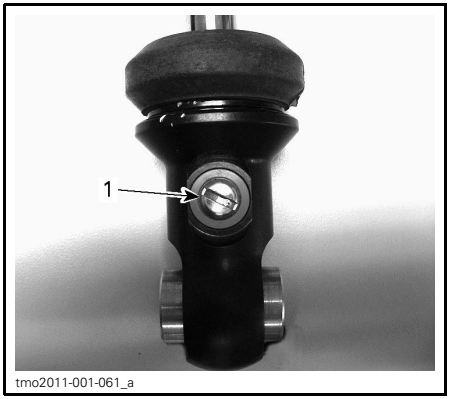

tmo2011-001-061_a

1. *Rebound adjuster*

Turning it clockwise (H) **increases** shock damping action (harder).

Turning it counterclockwise (S) **decreases** shock damping action (softer).

Shock Air Pressure Adjustment (LTD Models Only)

The Air Controlled Suspension (ACS) system allows the operator to adjust the air pressure in the front and rear shock absorbers simultaneously or separately using controls without having to get off the vehicle. By changing the ACS setting, air pressure in the front and rear shock absorbers will change to provide a multitude of different suspension adjustments.

The ACS indicator can be accessed by pressing the ACS switch or Mode button.

NOTICE **ACS setting will change when using the ACS switch to access the air controlled (ACS) indicator.**

NOTE: The ACS suspension will NOT self-adjust unless the engine is running.

The ACS has 2 modes for suspension adjustment;

– Automatic mode
– Manual mode.

Automatic Mode

The automatic mode allows for simultaneous adjustments on the front and rear suspensions.

To Enter Automatic Mode:

Press the MODE button until either ACS AUTO or ACS MAN is displayed.

Press SET button to have current ACS mode blink on screen

Press SET button to select ACS AUTO mode.

NOTE: Selected ACS Setting from ACS1 to ACS6 displayed through gearbox position indicator.

tmo2012-003-221_c

Press and hold SET button to confirm selection.

To Adjust ACS in the Automatic Mode:

Use the ACS switch to select desired ACS setting for both front and rear suspensions.

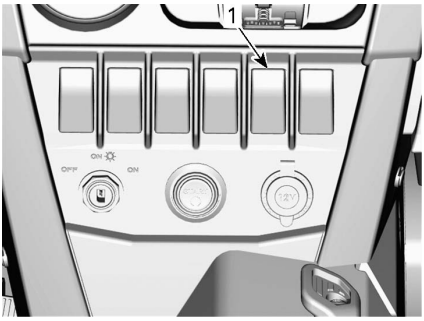

tmo2014-001-014_g

1. *ACS switch*

Refer to table to select appropriate ACS setting.

ACS SUSPENSION SETTINGS		
SETTING	RIDING COMFORT	RIDING CONDITION
ACS 1	Softest	Trail riding
ACS 2	Soft	
ACS 3	Semi-soft	Trail riding with cargo
ACS 4	Semi-firm	
ACS 5	Firm with high ground clearance	Soft terrain riding (muddy, watery) and obstacles
ACS 6	Firmest and highest ground clearance	Soft terrain riding (muddy, watery) and obstacles or Carrying heavy loads

⚠ WARNING

Always adjust the ACS suspension setting according to load, riding condition, and speed.

Manual Mode

The manual mode allows for independent adjustments on the front and rear suspensions.

To Enter Manual Mode:

Press the MODE button until either ACS AUTO or ACS MAN is displayed.

Press SET button to have current ACS mode blink on screen.

Press SET button to select ACS MAN mode.

NOTE: ACS set points and actual settings displayed through fuel, temp and gearbox position indicators.

tmo2012-003-221_a

Press and hold SET button to confirm selection.

To Adjust Front Suspension:

Press on the OVERRIDE switch until front (F) is blinking to select front (F) suspension setting.

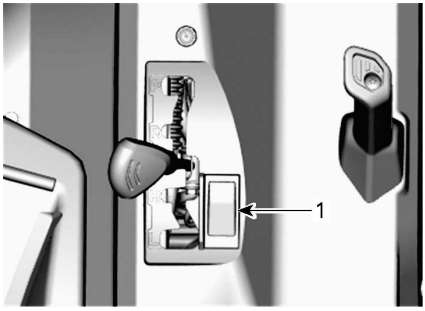

tmo2014-001-013_b

1. Override switch

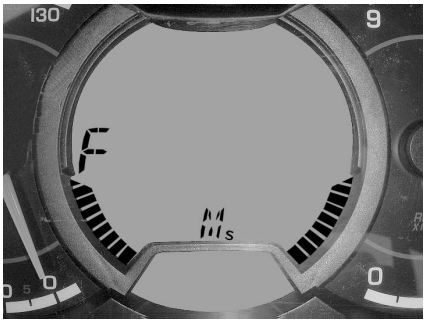

tmo2012-003-221_e

Press and hold ACS switch to lower or raise the front suspension until desired setting is achieved.

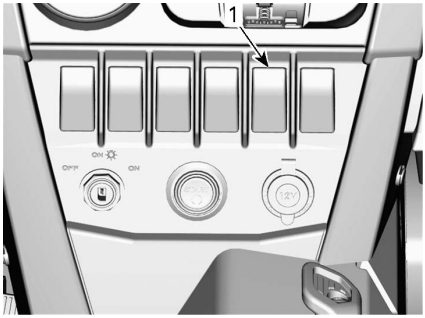

tmo2014-001-014_g

1. ACS switch

To Adjust Rear Suspension:

Press on the OVERRIDE switch until rear (R) is blinking to select rear (R) suspension setting.

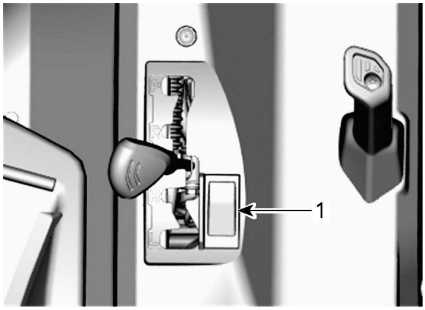

tmo2014-001-013_b

1. Override switch

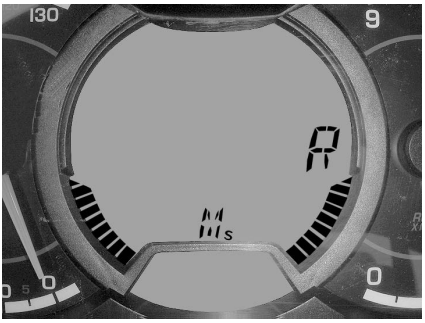

tmo2012-003-221_d

Use the ACS switch to lower or raise the rear suspension.

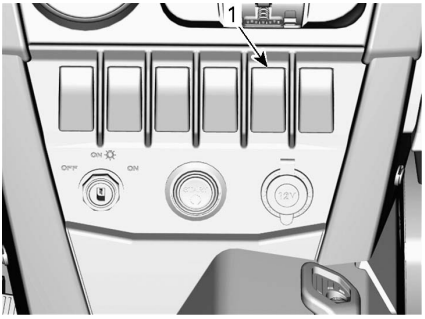

tmo2014-001-014_g

1. ACS switch

NOTE: Fuel and temperature indicators will respectively become front and rear ACS setting indicators.

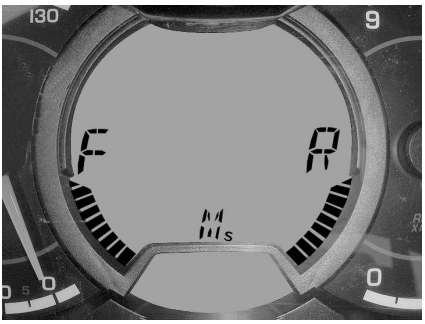

tmo2012-003-221_b

Quick Mode Selection

The last setting utilized in each mode is stored in the system. This allows for quick selections between the stored automatic mode setting and the stored manual mode setting.

To Enter Quick Mode Selection:

Press the MODE button until either ACS AUTO or ACS MAN is displayed.

Press SET button to have current ACS mode blink on screen.

Press SET button to select desired mode.

tmo2012-003-221_a

tmo2012-003-221_c

Press and hold SET button to confirm selection.

ACS system will adjust to the last settings.

DPS Function

The applicable models are equipped with a Dynamic Power Steering (DPS) system. The DPS reduces the effort to turn the steering wheel.

The following DPS modes are preset in the vehicle.

DPS MODE	
DPS MAX.	Maximum steering assist
DPS MED.	Medium steering assist
DPS MIN.	Minimum steering assist

To show the active DPS mode, proceed as follows:

1. Press and release **DPS** switch.

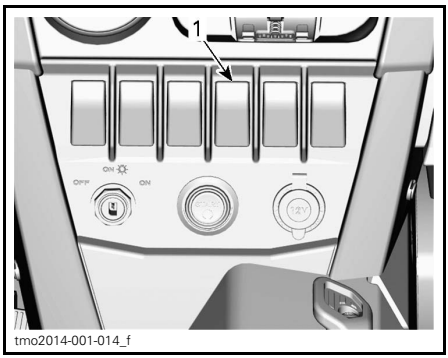

1. DPS switch

2. Check the multifunction gauge to confirm the active DPS mode.

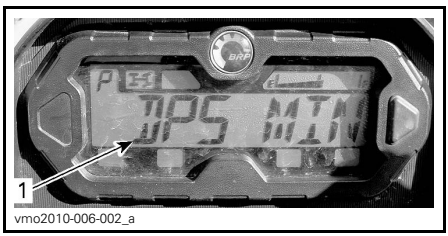

1. DPS mode display

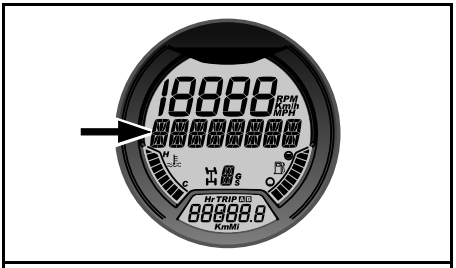

ANALOG/DIGITAL GAUGE

1. DPS mode display

To change the DPS mode, proceed as follows:

1. Press and hold **DPS** switch for 2 seconds to go to the next setting.
2. Release **DPS** switch.
3. Repeat until desired setting is selected.

NOTE: The DPS adjustment will not be possible if the vehicle transmission is set to **REVERSE** or if the ACS mode (LTD model) is displayed in the multifunction gauge.

Fuel Requirements

NOTICE **Always use fresh gasoline. Gasoline will oxidize; the result is loss of octane, volatile compounds, and the production of gum and varnish deposits which can damage the fuel system.**

Alcohol fuel blending varies by country and region. Your vehicle has been designed to operate using the recommended fuels, however, be aware of the following:

- Use of fuel containing alcohol above the percentage specified by government regulations is not recommended and can result in the following problems in the fuel system components:
  - Starting and operating difficulties.
  - Deterioration of rubber or plastic parts.
  - Corrosion of metal parts.
  - Damage to internal engine parts.
- Inspect frequently for the presence of fuel leaks or other fuel system abnormalities if you suspect the presence of alcohol in gasoline exceeds the current government regulations.
- Alcohol blended fuels attract and hold moisture which may lead to fuel phase separation and can result in engine performance problems or engine damage.

Recommended Fuel

Use common unleaded gasoline with an AKI (R+M)/2 octane rating of 87, or a RON octane rating of 92.

NOTICE **Never experiment with other fuels. Engine or fuel system damages may occur with the use of an inadequate fuel.**

NOTICE **Do NOT use fuel from fuel pumps labeled E85.**

Use of fuel labeled E15 is prohibited by U.S. EPA Regulations.

Vehicle Fueling Procedure

⚠ WARNING

- **Fuel is flammable and explosive under certain conditions.**
- **Never use an open flame to check fuel level.**
- **Never smoke or allow flame or spark in vicinity.**
- **Always work in a well-ventilated area.**

1. Stop engine.

⚠ WARNING

Always stop engine before refueling.

2. Have driver and passenger get out of vehicle.

⚠ WARNING

Do not allow anyone to remain in the vehicle while fueling. If there is a fire or explosion during fueling, a vehicle occupant could be unable to quickly leave the area.

3. Unscrew slowly the fuel reservoir cap counterclockwise to remove it.

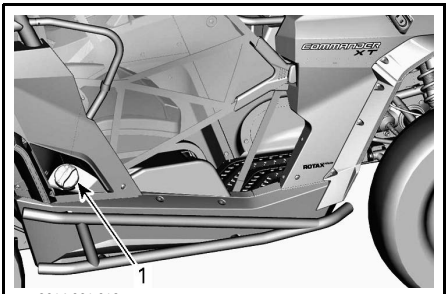

tmo2014-001-019_a

1. Fuel reservoir cap

⚠ WARNING

If a differential pressure condition is noticed (whistling sound heard when loosening fuel reservoir cap) have vehicle inspected and/or repaired before further operation.

4. Insert the spout into the filler neck.
5. Pour fuel slowly so that air can escape from the tank and prevent fuel flow back. Be careful not to spill fuel.
6. Stop filling when the fuel reaches the bottom of filler neck. **Do not overfill.**

⚠ WARNING

Never top up the fuel tank before placing the vehicle in a warm area. As temperature increases, fuel expands and may overflow.

7. Fully tighten fuel reservoir cap clockwise.

⚠ WARNING

Always wipe off any fuel spillage from the vehicle.

Fueling a Gasoline Container

⚠ WARNING

- Use only an approved gasoline container to store fuel.
- Never fill the gasoline container in the vehicle cargo box or on-the vehicle - an electrical static discharge may ignite the fuel.

Operation During Break-In

A break-in period of 10 operating hours or 300 km (200 mi) is required for the vehicle.

Engine

During the break-in period:

- Avoid full throttle operation.
- Avoid pressing accelerator pedal more than 3/4 of the stroke.
- Avoid sustained accelerations.
- Avoid prolonged cruising speeds.

However, brief accelerations and speed variations contribute to a good break-in.

Brakes

⚠ WARNING

New brakes will not operate at their maximum efficiency until their break-in is completed. Braking performance may be reduced, so use extra caution.

Belt

A new belt requires a break in period of 50 km (30 mi).

During the break-in period:

- Avoid strong acceleration and deceleration.
- Avoid pulling a load.
- Avoid high speed cruising.

Starting the Engine

Insert key in ignition switch and turn to one of the ON position.

Press the brake pedal.

NOTE: If shift lever is not set to PARK (P), the brake pedal must be pressed to allow engine starting.

Press the engine start button and hold until the engine starts.

NOTE: Do not press the accelerator pedal. If the accelerator pedal is pressed at least 20%, the engine will not start.

Release the engine start button immediately when the engine has started.

NOTICE **If engine does not start after a few seconds, do not hold the engine start button more than 10 seconds. Refer to *TROUBLESHOOTING* section.**

Shifting the Transmission

Apply brakes and select the desired shift lever position.

Release brakes.

NOTICE **When changing gear selection, always completely stop the vehicle and apply the brakes prior to shifting. Damage to the transmission may occur.**

Choosing the Correct Range (Low or High)

It is important to limit situations known to make the drive belt slip excessively. The main reason the drive belt will slip is if the gearbox is in high range when it should be in low range.

Pay attention to the following:

Low range

Low range should be used whenever:

- Pulling
- Pushing
- Hauling a load
- 4x4 applications
- Mud holes
- Water holes
- Crossing obstacles
- Climbing onto trailer
- Hill climbing

It is also recommended to use low range if driving for prolonged periods at speeds under 24 km/h (15 MPH)

Please refer to *BREAK-IN PERIOD* subsection in this guide for information in regards to belt break-in period.

High range

High is the default riding range.

Electronic Drive Belt Protection (if available and activated on your model)

Some vehicles have the electronic drive belt protection function activated.

Refer to your authorized Can-Am dealer for availability and possible activation.

This function is activated when riding at too slow speed for the **high range**, such as in the following situations:

- Pulling
- Pushing
- Hauling a load
- 4x4 applications
- Mud holes
- Water holes
- Crossing obstacles
- Climbing onto trailer
- Hill climbing

In the above mentioned situations the electronic drive belt protection will help protect the CVT drive belt from being damaged by activating the engine torque limiter. The gauge will also scroll a *LOW GEAR* message, suggesting the operator to immobilize the vehicle and set to LOW GEAR.

Whenever the electronic drive belt protection is activated, you MUST shift in LOW range. Refer to *SHIFTING THE TRANSMISSION*.

If the situation does not allow you to shift in LOW range, it is possible to temporarily deactivate the electronic drive belt protection by pressing on the override switch. Refer to *OVERRIDE SWITCH*.

⚠ WARNING

DO NOT USE THE OVERRIDE SWITCH if the slope is too steep and that there might be a risk of tipover. Apply brakes to immobilize vehicle. Put shift lever in reverse (R), and back down the hill, barely releasing brakes to remain at low speed. Do not attempt to turn around. Never coast down hill while vehicle is in neutral. Do not perform hard braking as it increases the risk of tipover.

Stopping the Engine and Parking the Vehicle

⚠ WARNING

Avoid parking on steep slope as the vehicle may roll away.

⚠ WARNING

Always put the vehicle in PARK when stopped or parked to prevent rolling.

⚠ WARNING

Avoid parking in places where hot parts can start a fire.

When stopped or parked always bring shift lever to park position. This is especially important when parking on a slope. On very steep inclines or if the vehicle is carriyng a cargo, the wheels should be blocked using rocks or bricks.

Select the flattest terrain available for parking.

Release accelerator pedal and use brakes to completely stop the vehicle.

Set shift lever in PARK position.

Turn key in ignition switch to OFF position.

Remove key from ignition switch.

If you must park on a steep incline or if the vehicle is carrying cargo, block the wheels using rocks or bricks.

Tips for Maximizing Drive Belt Durability

Riding style and conditions have a direct impact on drive belt durability. Your vehicle features a CVT system design that is optimized to offer the best performance. The CVT and drive belt have successfully endured thousands of miles of durability tests. However, to maximize drive belt durability and to prevent premature failures, it is important that the operator understands the limits of a belt driven CVT system and adapts their riding style and speed accordingly.

If riding in any of the conditions listed below, BRP highly recommends not to constantly hold the throttle wide open (WOT) for more than five (5) minutes.

- High ambient temperatures (above 30°C (86°F)
- Heavy loads: Passenger / Heavy cargo
- Heavy drag: Soft sand / Hill climbing / Mud / Using a track kit.

After a few minutes at WOT, partially release the accelerator and allow the CVT to cool down.

For more tips for maximizing the drive belt durability, refer to *CHOOSING THE CORRECT RANGE (LOW OR HIGH)*.

What to do if Water is Suspected to be in the CVT

If water is present in the CVT, the engine will accelerate but the vehicle will remain still.

NOTICE Stop the engine and drain the water to avoid damage to the CVT.

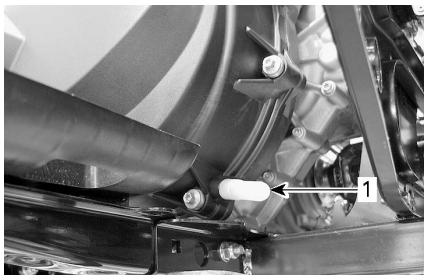

vmo2012-012-055_a

1. CVT drain

CVT drain is accessible by removing the skid plate under the LH side of the vehicle.

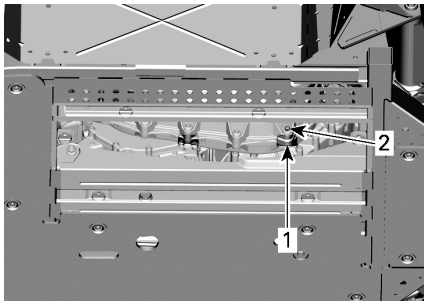

tmo2012-001-202_a

SKID PLATE REMOVED
1. Access hole under skid plate
2. CVT drain location

See an authorized Can-Am dealer to have the CVT inspected and cleaned.

What to do if Battery is Drained out

The vehicle can be jump started by using the red (+) cable to the battery positive pole and the black (-) cable to the vehicle chassis.

NOTICE Do not connect any electrical source to the steering column.

What to do if Vehicle Rolled Over

Abrupt maneuvers, sharp turns, side hilling or accident may cause vehicle to rollover.

Should the vehicle be rolled over, it will be necessary to have it transported to an authorized Can-Am dealer as soon as possible. NEVER START THE ENGINE!

What to do if Vehicle is Submerged

Should the vehicle become immersed, it will be necessary to have it transported to an authorized Can-Am dealer as soon as possible.

NOTICE Never start the engine as immersion of the vehicle can cause serious damage to the engine if the correct restart procedure is not followed.

TRANSPORTING THE VEHICLE

If your vehicle needs to be transported, it should be carried on a flatbed trailer of the proper size and capacity.

NOTICE **Do not tow this vehicle — towing can seriously damage the vehicle's drive system.**

When contacting a towing or transporting service, be sure to ask if they have a flatbed trailer, loading ramp or power ramp to safely lift the vehicle and tie-down straps. Ensure the vehicle is properly transported as specified in this section.

NOTICE **Avoid using chains to tie the vehicle — they may damage the surface finish or plastic components.**

⚠ WARNING

If the vehicle is equipped with a windshield, transport it facing forward to avoid damaging the windshield.

To load the vehicle on a platform for transport, proceed as follow:

1. Shift the vehicle into NEUTRAL (N).
2. If the vehicle is equipped with a winch, use the winch to roll the vehicle on the platform.
3. If the vehicle is not equipped with a winch, proceed as follows:
   - 3.1 Put a strap around the lower arm of each front suspension.
   - 3.2 Attach the straps to the winch cable of the towing vehicle.
   - 3.3 Pull the vehicle on the flatbed trailer with the winch.
4. Remove the key from the ignition switch.
5. Strap the front tires by using tire towing straps.
6. Pass a tie-down strap inside each rear wheel.
7. Firmly attach the rear wheels tie-down straps to both sides of the rear of the trailer with ratchets.
8. Ensure that both the front and rear wheels are firmly attached to the trailer.

⚠ WARNING

Make sure no loose objects are present inside vehicle or in cargo box during vehicle transportation.

Front of Vehicle

Place vehicle on a flat non slippery ground.

Ensure vehicle shift lever is set to PARK.

Install an hydraulic jack under front skid plate.

Lift front of vehicle and install a jack stand on each side under frame section in front of the lip for center skid plate.

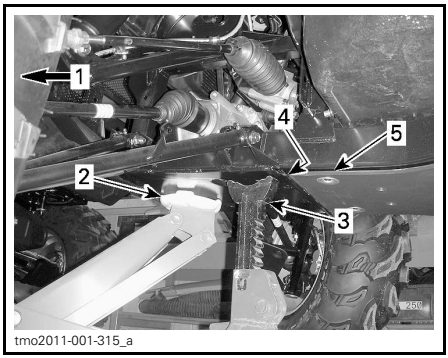

1. *Front of vehicle*
2. *Hydraulic jack*
3. *Jack stand*
4. *Lip for center skid plate*
5. *Center skid plate*

Lower hydraulic lift and ensure vehicle is supported safely onto both jack stands.

Rear of Vehicle

Place vehicle on a flat non slippery ground.

Activate 4WD mode.

Ensure vehicle shift lever is set to PARK.

Install an hydraulic jack under the trailer hitch.

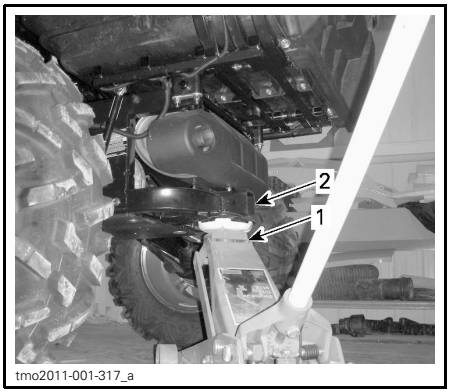

1. *Hydraulic jack*
2. *Trailer hitch*

Lift rear of vehicle and install a jack stand on each side under frame section in front of rear wheel.

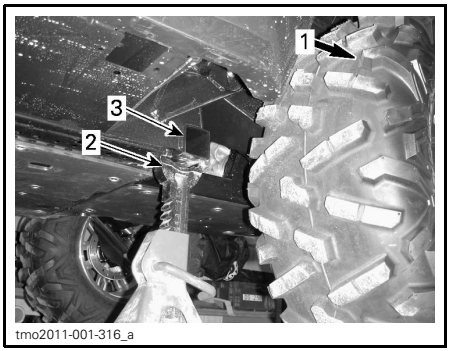

1. *Rear of vehicle*
2. *Jack stand*
3. *Frame section*

Lower hydraulic lift and ensure vehicle is supported safely onto both jack stands.

This page is intentionally blank

MAINTENANCE

MAINTENANCE SCHEDULE

Maintenance is very important for keeping your vehicle in safe operating condition. The vehicle should be serviced as per the maintenance schedule.

A repair shop or person of the owner's choosing may maintain, replace, or repair emission control devices and systems. These instructions do not require components or service by BRP or authorized Can-Am dealers. Although an authorized Can-Am dealer has an in-depth technical knowledge and tools to service the Can-Am SSV, the emission-related warranty is not conditioned on the use of an authorized Can-Am dealer or any other establishment with which BRP has a commercial relationship. For emission-related warranty claims, BRP is limiting the diagnosis and repair of emission-related parts to the authorized Can-Am dealers. For more information, please refer to the *US EPA EMISSION-RELATED WARRANTY* contained herein. Proper maintenance is the owner's responsibility. A warranty claim may be denied if, among other things, the owner or operator caused the problem through improper maintenance or use.

You must follow the instructions for fuel requirements in the fueling section of this manual. Even if gasoline containing greater than ten volume percent ethanol is readily available, the US EPA issued a prohibition against the use of gasoline containing greater than 10 vol% ethanol that applies to this vehicle. The use of gasoline containing greater than 10 vol% ethanol with this engine may harm the emission control system.

The following message appears in the gauge after every 50 hours of operation, to remind you of maintenance requirements: MAINTENANCE REQUIRED. To erase message, refer to *MESSAGE DISPLAY MODE* or *MULTIFUNCTION DISPLAY* subsections.

The maintenance schedule does not exempt the pre-ride inspection.

⚠ WARNING

Failure to properly maintain the vehicle according to the maintenance schedule and procedures can make it unsafe to operate.

SEVERE DUSTY CONDITIONS

Air Filter Maintenance Guideline

Air filter maintenance should be adjusted according to riding conditions.

Air filter maintenance must be increased in frequency in the following dusty conditions:

- Riding on dry sand
- Riding on dry dirt covered surfaces
- Riding on dry gravel roads or similar conditions.

NOTE: Riding in a group in these conditions would increase even more the air filter maintenance.

MAINTENANCE SCHEDULE LEGEND

Operation in trail riding conditions
Operation in severe riding conditions (dusty or muddy) or carrying heavy loads condition

MAINTENANCE SCHEDULE

Make sure to perform proper maintenance at recommended intervals as indicated in the tables. Some items of the maintenance schedule must be performed in function of the calendar, regardless of the distance or time of operation.

EVERY 1 500 KM (1,000 MI) OR 50 HOURS (whichever comes first)
EVERY 750 KM (500 MI) OR 25 HOURS (whichever comes first)
Verify and clean engine air filter. Replace as needed
Verify battery connections
Lubricate front and rear propeller shaft joints
Inspect tie rod ends and ball joints for play and boots condition
Lubricate suspension arm bushings
Inspect the drive shaft boots and protectors
Inspect brake pads. Replace as needed
Inspect wheel bearings for abnormal play
Clean exhaust area
Tighten beadlock screws (if equipped)
Inspect and clean CVT air filters (service more often in dusty conditions)
Inspect, clean and lubricate front and rear shock absorber spherical bearings (Commander LTD/XT-P)

EVERY 3 000 KM (2,000 MI) OR 100 HOURS (whichever comes first)
EVERY 1 500 KM (1,000 MI) OR 50 HOURS (whichever comes first)
Adjust valve clearance
Clean muffler spark arrester
Verify and clean throttle body
Replace fuel vent breather filter
Verify CVT drive belt and clean CVT pulleys
Inspect, clean and lubricate CVT one way bearing
Inspect centrifugal levers and rollers of the drive pulley. Replace as needed
Inspect ACS shock absorber hoses and fittings (ACS equipped model)
Replace rear shock absorber spherical bearings (Commander LTD/XT-P)
Inspect every suspension arm bushings and wear plates. Replace as needed
Tighten rear stabilizer bar bolts

EVERY 3 000 KM (2,000 MI) OR 100 HOURS (whichever comes first)
EVERY 1 500 KM (1,000 MI) OR 50 HOURS (whichever comes first)
The following must be performed at least once a year:
Change engine oil and filter
Inspect and clean brake system
Inspect battery condition
Verify steering system for abnormal play
Verify front differential and rear final drive oil level and look for contamination
Verify gearbox oil level and look for contamination

PERFORM AT THE FIRST 3 000 KM (2,000 MI)AND AT 6 000 KM (4,000 MI) THEN FOLLOW THE REGULAR SCHEDULE
PERFORM AT THE FIRST 1 500 KM (1,000 MI) AND AT 3 000 KM (2,000 MI) THEN FOLLOW THE REGULAR SCHEDULE
Replace gearbox oil
Clean the vehicle speed sensor (VSS)

EVERY 6 000 KM (4,000 MI) OR 200 HOURS (whichever comes first)
EVERY 3 000 KM (2,000 MI) OR 100 HOURS (whichever comes first)
Verify the cooling system
Test engine coolant strength
Verify fuel system for leaks
Verify fuel pump pressure
Replace spark plugs
Replace front differential oil
Replace rear final drive oil
Replace gearbox oil
Inspect input and output shaft seals (gearbox, differential and final drive)
Clean vehicle speed sensor
The following must be performed every 2 years:
Replace the brake fluid

EVERY 12 000 KM (8,000 MI) OR 5 YEARS (whichever comes first)
EVERY 6 000 KM (4,000 MI) OR 5 YEARS (whichever comes first)
Replace engine coolant

This section includes instructions for basic maintenance procedures.

NOTE: Maintenance message can be removed by alternately pressing the override switch and brake pedal 3 times at power up.

⚠ WARNING

Unless otherwise indicated, always turn ignition switch to the OFF position before performing any maintenance and remove key.

⚠ WARNING

Should removal of a locking device be required (e.g. lock tab, self-locking fastener, etc.) , always replace it with a new one.

Engine Air Filter

NOTICE **Never modify the air intake system. Otherwise, engine performance degradation or damage can occur. The engine is calibrated to operate specifically with these components.**

Engine Air Filter Replacement Guideline

Engine Air filter replacement frequency should be adjusted according to riding conditions as it is critical to ensure proper engine performance and life span.

Engine Air filter replacement frequency must be increased for the following severe riding conditions:

- Riding on dry sand.
- Riding on dry dirt covered surfaces.
- Riding on dry gravel trails or similar conditions.
- Riding in areas with high concentration of seeds or crop husks.
- Riding in severe snow conditions.

NOTE: Riding in a group under these conditions would increase even more the air filter replacement frequency.

Engine Air Filter Removal

1. Remove service cover.

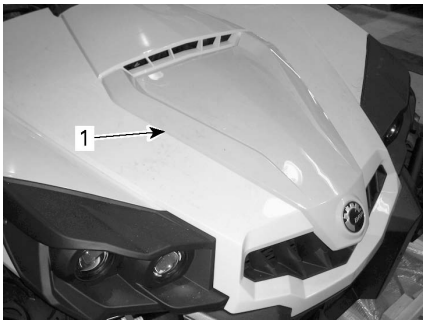

tmo2011-001-225_a

1. Service cover

2. Release clamps and remove the engine air filter housing cover.

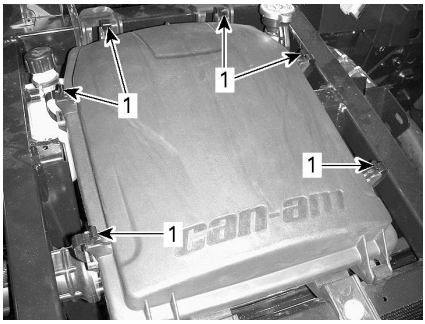

tmo2011-001-084_a

1. Release clamps

3. Remove engine air filter.

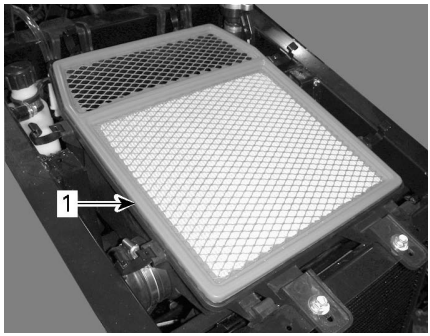

1. *Engine air filter*

Engine Air Filter Housing Cleaning

1. If there is water in the first air chamber, remove the drain plug, from underneath to expel water.

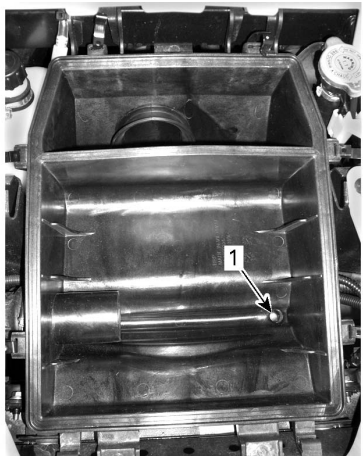

1. *Drain hole*

DRAIN PLUG ACCESS FROM LH SIDE OF VEHICLE

1. *Remove drain plug to expel water*

2. Clean both sections of the engine air filter housing with a vacuum cleaner.

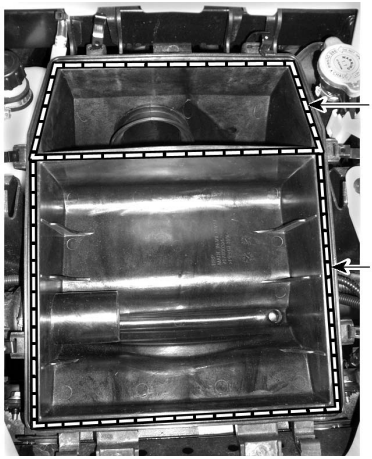

1. *First section*
2. *Second section (clean chamber)*

Engine Air Filter Housing Inspection

Verify that the engine air filter housing edges to hold the filter are straight and not damaged or warped.

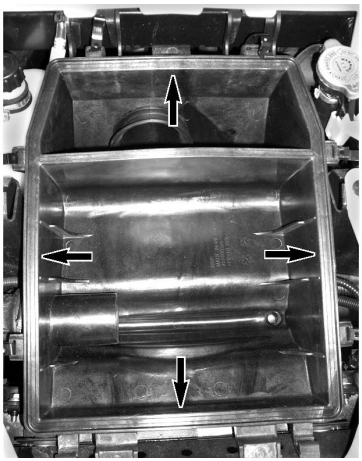

tbs2011-009-002_b

Engine Air Filter Cleaning

Clean engine air filter by tapping out heavy dust from paper element, this will allow dirt and dust to get out of the paper filter.

NOTICE **It is not recommended to blow compressed air on the paper element; this could damage the paper fibers and reduce its filtration ability when used in dusty environments. If engine air filter is too dirty and cannot be cleaned following the recommended procedure, it should be replaced.**

Engine Air Filter Installation

1. Install engine air filter.
2. Verify that engine air filter rubber seal has no gap with the engine air filter housing.

NOTICE **If the fit is not good, dust may bypass the engine air filter.**

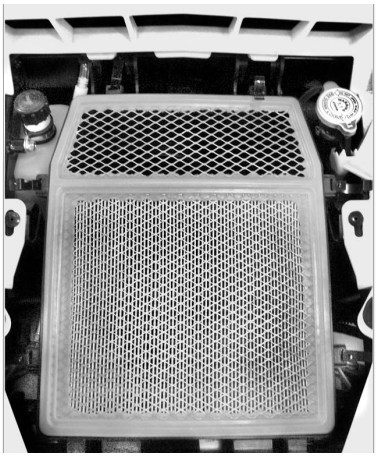

tbs2011-009-001

3. Verify that the cover fits well on the engine air filter housing before closing clamps.

tbs2011-009-003

Front Grill Kit

1. Remove debris from front grill kit.

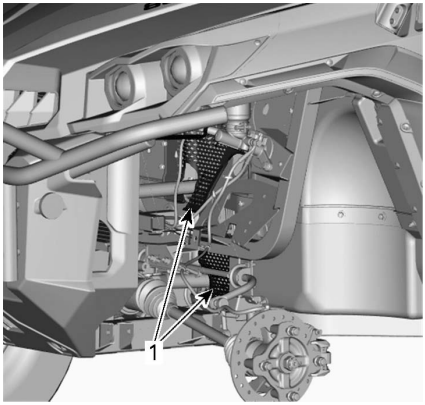

tmo2014-001-008_a

FRONT OF VEHICLE - COMPONENTS REMOVED FOR CLARITY
1. Front grill kit

2. Clean front grill kit with water.

CVT Air Filter

CVT air filter inspection and cleaning frequency should be adjusted according to riding conditions as it is critical to ensure proper engine performance and life span.

CVT Air filter inspection and cleaning frequency must be increased for the following severe riding conditions:

- Riding on dry sand.
- Riding on dry dirt covered surfaces.
- Riding on dry gravel trails or similar conditions.
- Riding in areas with high concentration of seeds or crop husks.
- Riding in severe snow conditions.

NOTE: Riding in a group in these conditions would increase even more the air filter replacement requirement.

CVT Air Filter Removal

1. Remove CVT air filter plastic cover located on left hand side of hood near driver.

tmo2011-001-080_a

1. CVT air filter plastic cover

2. Slide the cover rearward.

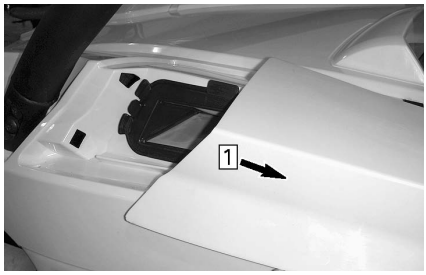

tmo2011-001-079_b

Step 1: Slide rearward

3. Pull CVT air filter out.

tmo2011-001-077_a

1. CVT air filter

CVT Air Filter Inspection and Cleaning

1. Inspect filter and replace if damaged.

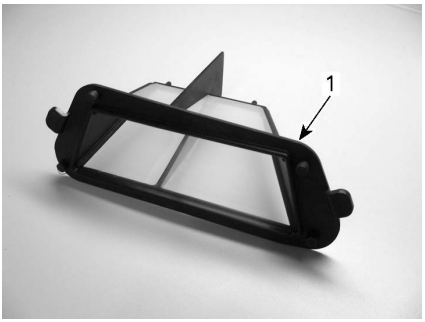

tmo2013-003-050_a

1. CVT air filter

2. Clean filter, using soft soap and water, then water rinse.
3. Gently shake off excess water and allow filter to dry at room temperature.
4. Clean inside the CVT air inlet with a vacuum cleaner.

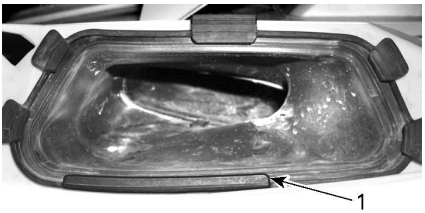

tbs2011-009-006_a

1. CVT air inlet

CVT Air Filter Installation

Reinstall CVT air filter and cover.

NOTE: Maintaining a clean CVT air filter will maximize air flow for an optimum CVT components lifespan.

Engine Oil

Engine Oil Level Verification

NOTICE **Operating the engine with an improper level may severely damage engine.**

NOTE: Dipstick is located under passenger seat.

With vehicle on a level surface and engine cold, check the oil level as follows:

1. Unscrew dipstick then remove it and wipe clean.

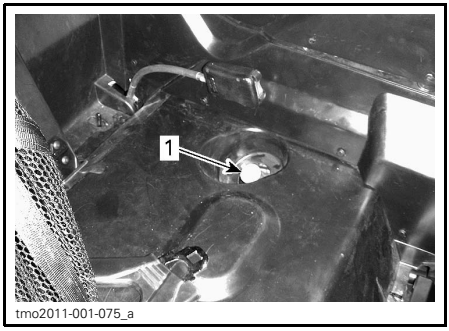

tmo2011-001-075_a

1. Dipstick

2. Reinstall dipstick, screw in it completely.
3. Remove dipstick and check oil level. It should be near or equal to the upper mark.

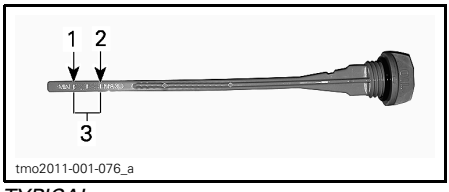

tmo2011-001-076_a

TYPICAL
1. MIN
2. MAX
3. Operating range

To add oil, remove the dipstick. Place a funnel into the dipstick tube.

Add a small amount of recommended oil and recheck oil level.

Repeat the above procedures until oil level reaches the dipstick's upper mark.

NOTE: **Do not overfill. Wipe off any spillage.**

Properly tighten dipstick.

Recommended Engine Oil

RECOMMENDED ENGINE OIL	
SEASON	TYPE
Summer	XPS 4-STROKE SYNTH. BLEND OIL (P/N 293 600 121)
Winter	XPS 4-STROKE SYNTHETIC OIL (P/N 293 600 112)

NOTE: The XPS oil is specially formulated to meet the lubrication requirements of this engine. BRP recommends the use of its XPS 4-stroke oil. If XPS engine oil is not available, use a 4-stroke SAE 5W 40 engine oil that meets or exceeds the requirements for API service classification SM, SL or SJ. Always check the API service label certification on the oil container it must contain at least one of the above standards.

NOTICE **Damages caused by the use of oil not suitable for this engine may not be covered by the BRP limited warranty.**

Engine Oil Change

Place vehicle on a level surface.

Oil change and oil filter replacement should be done with a warm engine.

CAUTION **The engine oil can be very hot. Wait until engine oil is warm.**

Place a drain pan under the engine drain plug area.

Clean the drain plug area.

Unscrew drain plug and discard the gasket ring.

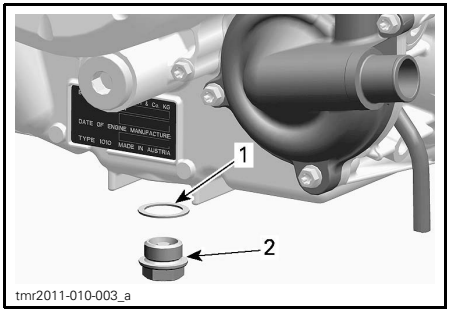

1. *Gasket ring*
2. *Drain plug*

Remove dipstick.

Allow oil to drain completely from the crankcase.

Clean the magnetic drain plug from metal shavings and residue. Presence of debris gives an indication of internal engine damage.

Install a NEW gasket ring on the drain plug.

NOTICE **Never use the gasket ring a second time. Always replace by a new one.**

Install and tighten drain plug to the recommended torque.

DRAIN PLUG TIGHTENING TORQUE
30 N•m ± 2 N•m (22 lbf•ft ± 1 lbf•ft)

Replace oil filter. Refer to *OIL FILTER* in this subsection.

Refill engine with recommended engine oil.

ENGINE OIL CAPACITY
2 L (2.1 qt (U.S. liq.))

Oil Filter

Oil Filter Access

Remove the passenger seat.

Remove the right hand side engine console panel.

Oil Filter Removal

Clean oil filter area.

Remove oil filter cover screws.

Remove oil filter cover.

Remove oil filter.

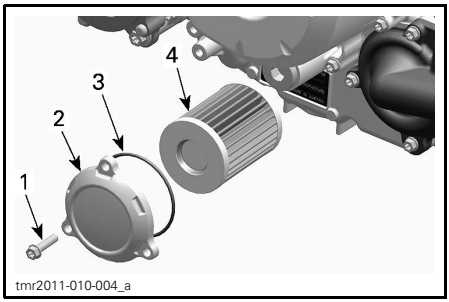

1. *Oil filter screw*
2. *Oil filter cover*
3. *O-ring*
4. *Oil filter*

Oil Filter Installation

Check and clean the oil filter inlet and outlet area for dirt and other contaminations.

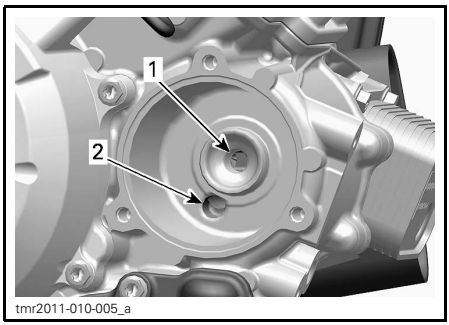

1. *Outlet to the engine oil providing system*
2. *Inlet from the oil pump to the oil filter*

Install a NEW O-ring on oil filter cover.

Install the filter into the cover.

Apply engine oil on O-ring and grease on the end of filter.

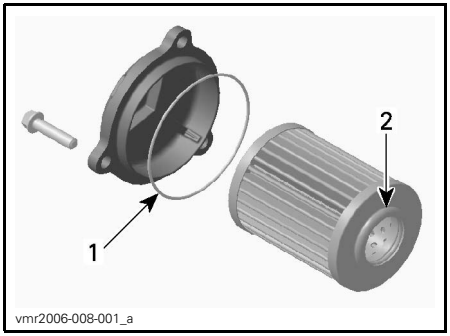

1. *Slightly oil*
2. *Slightly oil*

Install the cover on the engine.

Tighten oil filter cover screws to recommended torque.

OIL FILTER COVER SCREWS TIGHTENING TORQUE
10 N•m ± 1 N•m (89 lbf•**in** ± 9 lbf•**in**)

Radiator

Radiator Inspection and Cleaning

Periodically check the radiator area for cleanliness.

1. *Radiator*

Inspect radiator and hoses for leaks or any damage.

Inspect radiating fins. They must be clean, free of mud, dirt, leaves and any other deposit that would prevent the radiator to cool properly.

If available, use a garden hose to rinse the radiating fins.

CAUTION Never clean radiator with your hands when it is hot. Let the radiator cool down before cleaning.

NOTICE Be careful not to damage the radiating fins when cleaning. Do not use any object/tool that could damage the fins. When hosing, use low pressure only. Never use a HIGH PRESSURE washer.

Engine Coolant

Engine Coolant Level Verification

WARNING

Check coolant level with engine cold.

1. Place vehicle on a level surface.
2. Open service cover.
3. Remove the pressure cap.

WARNING

In order to avoid potential burns, do not remove the pressure cap if the engine is hot.

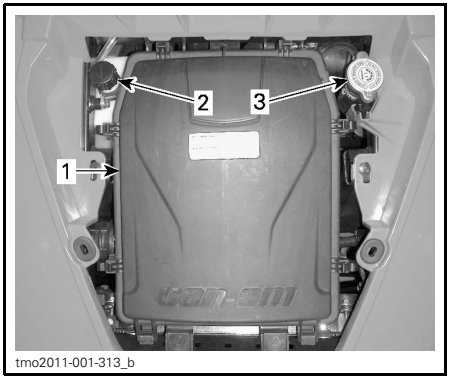

tmo2011-001-313_b

1. *Air filter housing cover*
2. *Coolant expansion tank cap*
3. *Pressure cap*

4. Ensure cooling system is full up to the pressure cap seat.

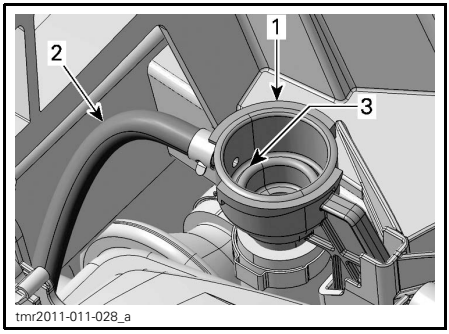

tmr2011-011-028_a

1. *Cooling system refill adapter*
2. *Expansion tank hose*
3. *Coolant system full level (pressure cap seat)*

5. Add coolant in system as necessary.
6. Properly reinstall pressure cap on refill adapter.
7. Check coolant level in expansion tank.

NOTE: Coolant level can be checked by looking at the side of the coolant expansion tank under the RH front fender.

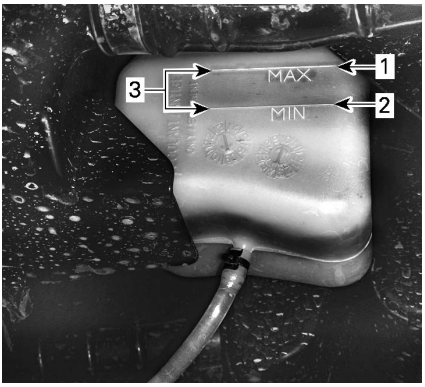

tmo2011-001-088_a

COOLANT EXPANSION TANK
1. *MAX. level*
2. *MIN. level*
3. *Operating range*

8. Add coolant if level is below MIN. mark. Use a funnel to avoid spillage. **Do not overfill.**
9. Properly reinstall coolant expansion tank cap.
10. Reinstall service cover.

NOTE: A cooling system that frequently requires addition of coolant is an indication of leaks or engine problems.

Recommended Engine Coolant

COOLANT	
BRP recommended product	LONG LIFE ANTIFREEZE (P/N 219 702 685)
Alternative, or if not available	Distilled water and antifreeze solution (50% distilled water, 50% antifreeze)

NOTICE **Always use ethylene-glycol antifreeze containing corrosion inhibitors specifically for internal combustion aluminum engines.**

Engine Coolant Replacement

Cooling System Draining

⚠ WARNING

In order to avoid potential burns, do not remove the pressure cap or loosen the coolant drain plug if the engine is hot.

1. Remove service cover.
2. Remove the cooling system pressure cap.

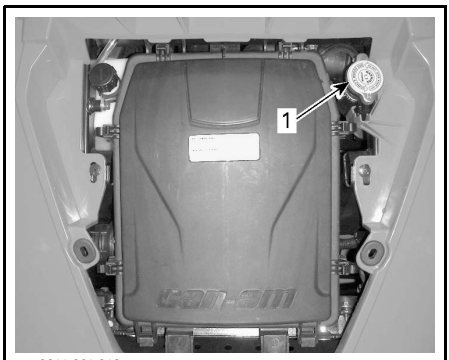

tmo2011-001-313_a

1. *Pressure cap*

3. Unscrew coolant drain plug and drain the coolant into a suitable container.

NOTE: The drain plug is accessible from underneath the vehicle.

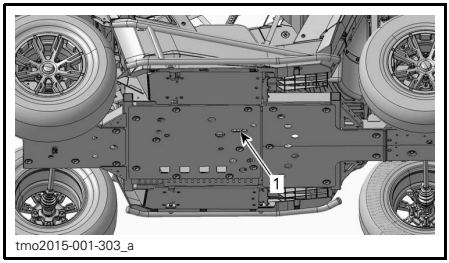

tmo2015-001-303_a

1. *Cooling system drain plug access*

NOTE: Do not unscrew the coolant drain plug completely.

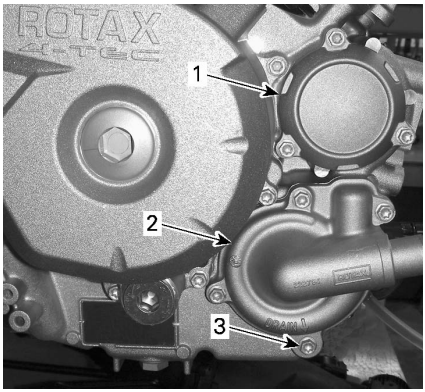

tmo2011-001-120_a

1. *Oil filter cover*
2. *Water pump cover*
3. *Coolant drain plug*

4. Disconnect the lower radiator hose and drain the remaining coolant into a suitable container.

NOTE: Take note of the position of the hose clamp on the lower radiator hose at the radiator.

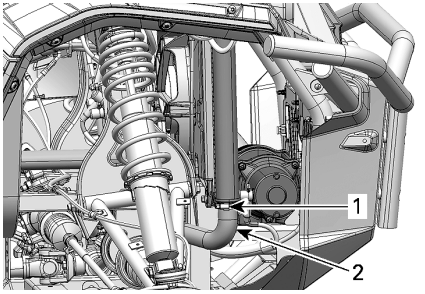

tmr2011-011-029_a

1. *Hose clamp position to note*
2. *Lower radiator hose to remove*

5. Drain cooling system completely.
6. Reinstall cooling system drain plug.

COOLING SYSTEM DRAIN PLUG TORQUE
9 N•m to 11 N•m (80 lbf•**in** to 97 lbf•**in**)

7. Reinstall radiator hose as noted prior to removal.

RADIATOR HOSE CLAMP
2.5 N•m to 3.5 N•m (22 lbf•**in** to 31 lbf•**in**)

8. Siphon the cooling system expansion tank.
9. Fill cooling system with coolant, refer to *COOLING SYSTEM BLEEDING* procedure.

Cooling System Bleeding

800R Models

1. Unscrew bleed screw on thermostat housing cover of front cylinder.

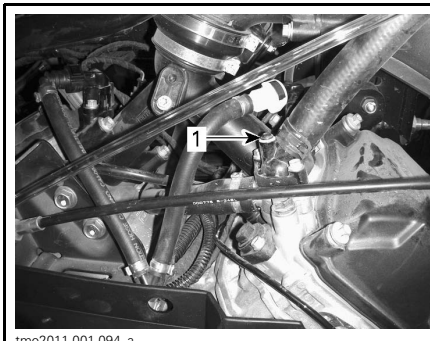

tmo2011-001-094_a

TYPICAL
1. *Bleed screw*

1000 Models

2. Unscrew bleed screws on thermostat housing covers of both front and rear cylinders.

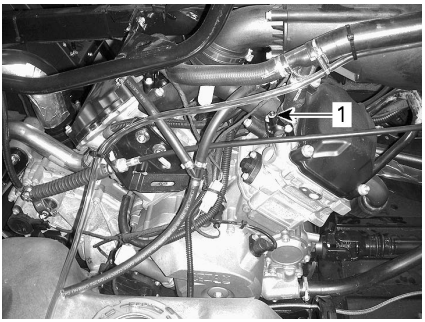

tmo2011-001-501_a

1. *Front cylinder bleed screw*

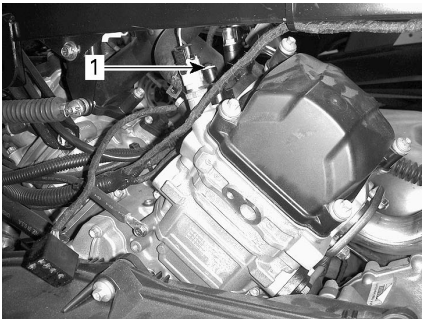

tmo2011-001-502_a

1. *Rear cylinder bleed screw*

All Models

3. Remove the pressure cap.
4. Fill the cooling system until coolant comes out of the bleed screw(s).
5. Install the bleed screw(s) using NEW gasket ring(s) and torque as per following chart.

BLEED SCREW INSTALLATION	
GASKET RING	TORQUE
New	4.4 N•m to 5.6 N•m (39 lbf•**in** to 50 lbf•**in**)

6. Continue adding coolant until system is full up to the pressure cap seat in the refill adapter.

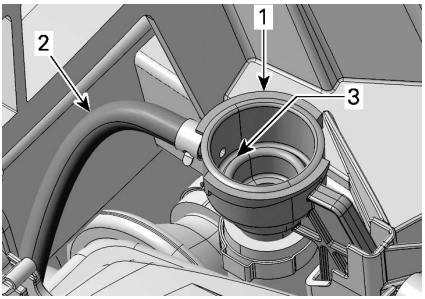

tmr2011-011-028_a

1. *Cooling system refill adapter*
2. *Expansion tank hose*
3. *Coolant system full level (pressure cap seat)*

7. Install pressure cap.

NOTICE **The following steps must be carried out as specified to ensure proper cooling system bleeding in addition to the previous steps.**

8. Lift the entire front end of the vehicle so the front tires are 60 cm (2 ft) above the ground for at least 1 minute.

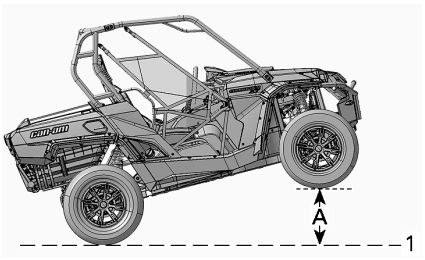

tmr2011-011-025_a

ENTIRE FRONT END LIFTED

1. *Ground level*

A. 60 cm (24 in)

9. Lower vehicle to the ground.
10. Remove pressure cap and add coolant as required.
11. Install pressure cap.
12. Lift driver's side of vehicle 60 cm (2 ft) above it's horizontal position for at least 1 minute.

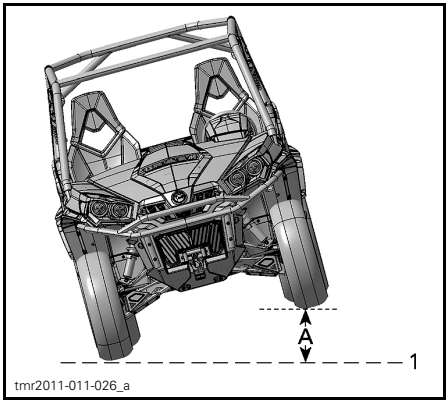

DRIVER'S SIDE LIFTED
1. *Ground level*

A. *60 cm (24 in)*

13. Lower vehicle to the ground.
14. Remove pressure cap and add coolant as required up to the pressure cap seat in the refill adapter.

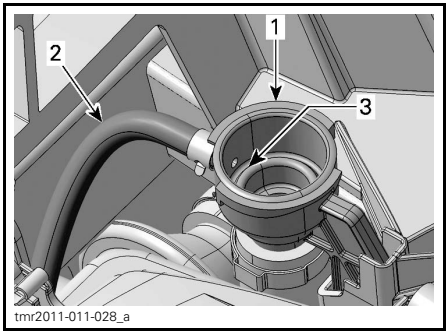

1. *Cooling system refill adapter*
2. *Expansion tank hose*
3. *Coolant system full level (pressure cap seat)*

15. Install the pressure cap.
16. Check coolant level in the coolant expansion tank and fill to the MIN. level (as required).
17. Run engine at idle with the pressure cap ON until the cooling fan cycles on for a second time.
18. Stop the engine and let it cool down.

⚠ WARNING

In order to avoid potential burns, do not remove the pressure cap if the engine is hot.

19. When the engine is cool, remove pressure cap and add coolant if required.
20. Install pressure cap.
21. Check coolant level in the expansion tank. Add coolant as required. Refer to *ENGINE COOLANT LEVEL VERIFICATION* in this subsection.

Muffler Spark Arrester

Muffler Spark Arrester Cleaning and Inspection

⚠ CAUTION **Never perform this operation immediately after the engine has been running as exhaust system is very hot.**

Remove the muffler cover.

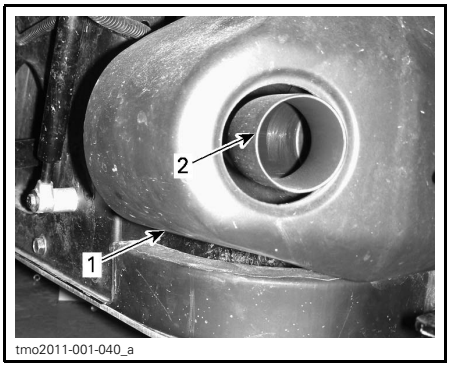

1. *Muffler cover*
2. *Exhaust tail pipe*

Remove and discard the tail pipe retaining screws.

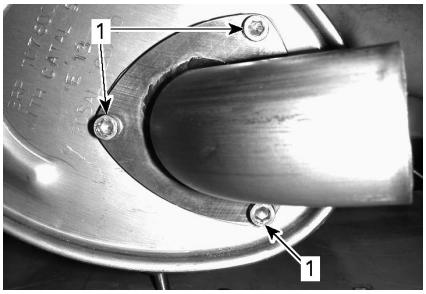

tmo2011-001-045_a

1. *Retaining screws*

Remove exhaust tail pipe, gasket (discard) and spark arrester.

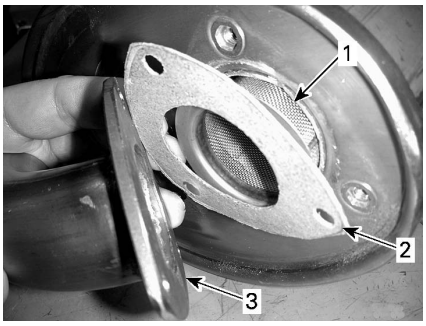

tmo2011-001-041_a

1. *Spark arrester*
2. *Gasket*
3. *Exhaust tail pipe*

Remove carbon deposits from the spark arrester using a brush.

NOTICE **Use a soft brush and be careful to avoid damaging spark arrester mesh.**

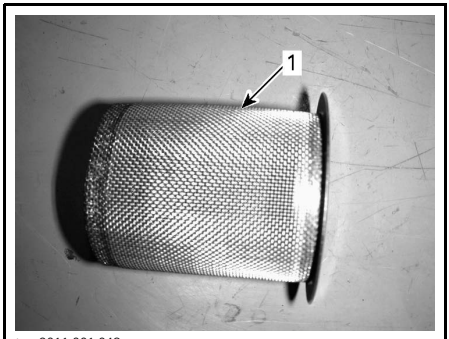

tmo2011-001-043_a

1. *Clean spark arrester*

Inspect mesh of spark arrester for any damage. Replace as required.

Inspect spark arrester chamber in muffler. Remove any debris as required.

Reinstall the muffler spark arrester in the reverse of the removal procedure. However pay attention to the following.

Install new gasket and retaining screws. Torque to specification.

TORQUE	
Tailpipe retaining screw	11 N•m ± 1 N•m (97 lbf•**in** ± 9 lbf•**in**)

Gearbox Oil

Gearbox Oil Level Verification

Place the vehicle on a level surface. Select PARK position.

Check the gearbox oil level by removing the gearbox oil level plug.

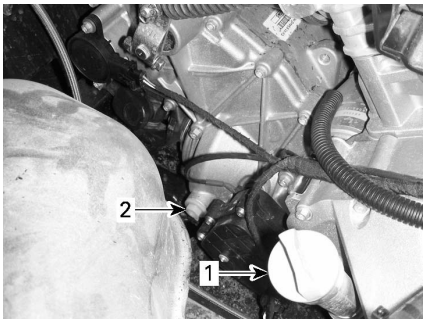

tmo2011-001-117_a

1. *Engine oil dipstick*
2. *Gearbox oil level plug*

The oil should be level with the bottom of the oil level hole.

NOTICE **Operating the gearbox with an improper oil level may severely damage gearbox.**

Recommended Gearbox Oil

Use the following gearbox oil.

RECOMMENDED GEARBOX OIL
XPS synthetic gear oil (P/N 293 600 140)

NOTE: The XPS oil is specially formulated to meet the lubrication requirements of this gearbox. BRP strongly recommends the use of its XPS oil. However, if the XPS synthetic gear oil is not available, use the following lubricant:

GEARBOX OIL REQUIREMENT
75W 140 API GL-5 synthetic gear oil

NOTICE **Do not use another type of oil when servicing.**

Gearbox Oil Change

NOTE: When replacing the gearbox oil, it is recommended to clean the vehicle speed sensor (VSS) at the same time.

Place the vehicle on a level surface.

Clean drain plug area.

Clean the oil level plug area.

Under the vehicle, place a drain pan underneath the oil drain plug area.

Remove the oil level plug.

Remove the gearbox drain plug.

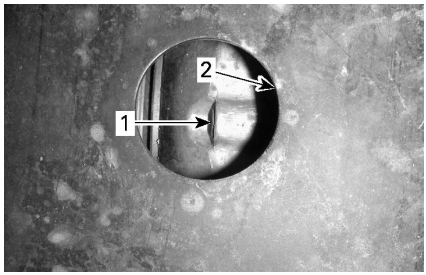

tmo2011-001-097_a

1. *Oil drain plug*
2. *Skid plate opening*

Let oil completely drain from gearbox.

Install the drain plug.

NOTE: Clean drain plug from any metallic particles prior to installation.

Refill gearbox.

NOTICE **Use ONLY the recommended type of oil.**

The oil should be level with the bottom of the oil level orifice.

NOTICE **Do not overfill.**

Reinstall oil level plug.

Wipe off any spillage.

Spark Plugs

Access to Spark Plugs

1. Remove both seats.
2. Remove upper console retaining screws and plastic rivets.
3. Slightly lift upper console to allow removal of lower console.
4. Remove lower console plastic rivets.
5. Pull lower console out of location.

Spark Plug Removal

Unplug spark plug cable.

NOTE: Spark plug removal procedure is the same for both cylinders.

Clean spark plug and cylinder head with pressurized air.

⚠ CAUTION Always wear safety goggles when using pressurized air.

Unscrew spark plug completely then remove it.

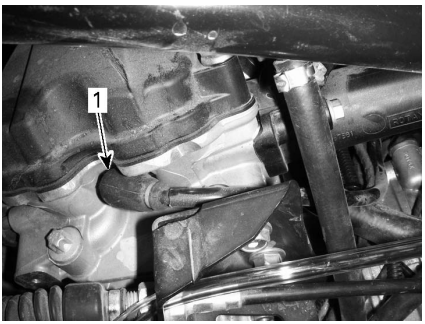

tmo2011-001-110_a

RH SIDE — REAR CYLINDER
1. Spark plug

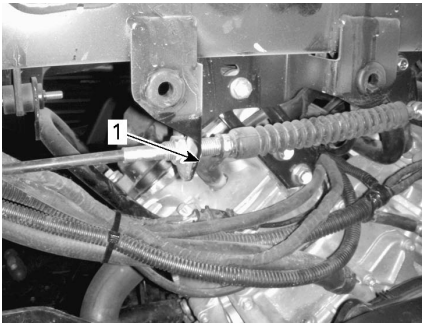

tmo2011-001-111_a

LH SIDE — FRONT CYLINDER
1. Spark plug

Spark Plug Installation

Prior to installation make sure that contact surface of cylinder head and spark plug is free of grime.

Using a feeler gauge, set the spark plug gap.

SPARK PLUG GAP
0.7 mm - 0.8 mm (.028 in - .031 in)

Apply a small amount of copper-based anti-seize lubricant over spark plug threads.

Screw spark plug into cylinder heads by hand and tighten with a torque wrench and a proper socket.

TORQUE	
Spark plug	20 N•m ± 2.4 N•m (15 lbf•ft ± 2 lbf•ft)

CVT Cover

NOTE: For a better understanding, some illustrations are taken with engine out of vehicle. To perform the following instructions, it is not necessary to remove engine.

This CVT is lubrication free. Never lubricate any components except drive pulley one-way clutch.

⚠ WARNING

Never touch CVT while engine is running. Never drive vehicle when CVT cover is removed.

⚠ WARNING

Engine must be cool before cover is removed. Always wear protective gloves when removing cover.

Place the vehicle on a level surface. Select PARK position.

CVT Cover Access

1. Remove LH seat.
2. Remove nine plastic rivets to remove LH lateral console panel.

NOTE: Use flat head screwdriver supplied in tool kit to remove plastic rivets.

3. Carefully pull out the panel.
4. Remove eight plastic rivets to remove under seat storage compartment.

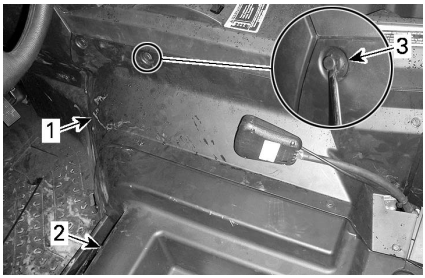

tmo2013-003-047_a

1. LH console panel
2. Under seat storage compartment
3. Plastic rivets

NOTE: This part will still be attached to the vehicle by the seat belt. Do not detach.

CVT Cover Removal

Remove the thirteen CVT cover screws.

NOTE: The CVT cover lower screws are accessible through the square holes in the central skid plate.

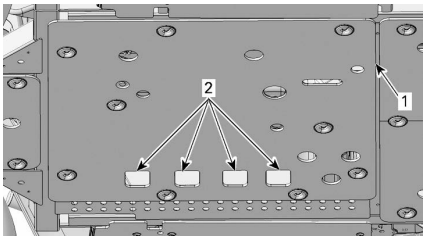

tmo2015-001-302_a

1. Central skid plate
2. Access holes

NOTE: Remove the center top screw last to support the cover during removal.

NOTE: Do not use and impact tool to remove CVT cover screws.

Remove the CVT cover and its gasket.

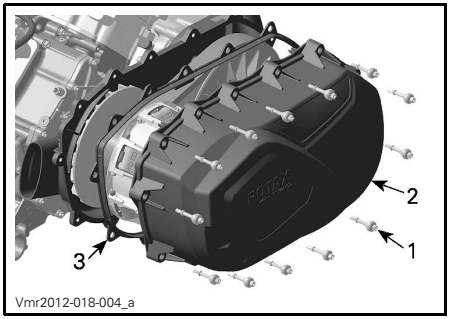

Vmr2012-018-004_a

1. CVT cover lower screws
2. CVT cover screws
3. CVT cover

CVT Cover Installation

Install the center top screw of first.

Tighten the CVT cover screws as per following sequence.

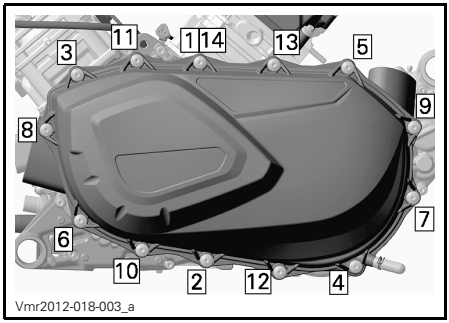

Vmr2012-018-003_a

CVT COVER TIGHTENING SEQUENCE

CVT COVER SCREWS	
Tightening torque	7 N•m ± 0.8 N•m (62 lbf•**in** ± 7 lbf•**in**)

Drive Belt

Drive Belt Removal

NOTICE **In case of a drive belt failure, the CVT, cover and air outlet must be cleaned.**

Please refer to *TIPS FOR MAXIMIZING DRIVE BELT DURABILITY* in *BASIC PROCEDURES* section for some IMPORTANT information.

Remove *CVT COVER*.

Open driven pulley.

REQUIRED TOOL	
Puller/Locking tool (P/N 529 000 072)	

Screw tool in the threaded hole of driven pulley and tighten to open the pulley.

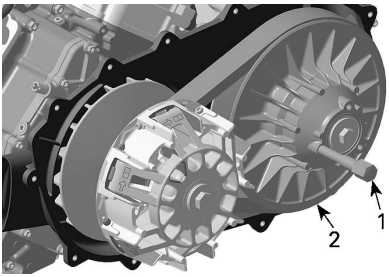

Vmr2012-018-005_a

TYPICAL
1. *Puller/locking tool*
2. *Fixed sheave of driven pulley*

To remove belt, slip the belt over the top edge of fixed sheave, as shown.

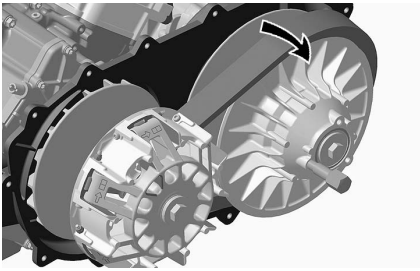
Vmr2012-018-006_a

Drive Belt Installation

For installation, reverse the removal procedure. Pay attention to following details.

The maximum drive belt life span is obtained when the drive belt has the proper rotation direction. Install it so that the arrow printed on belt is pointing towards front of the vehicle, viewed from top.

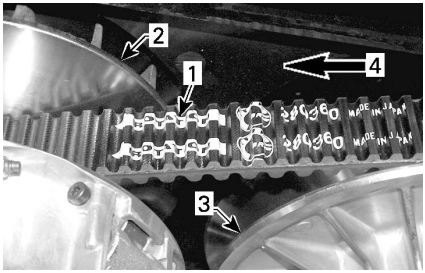

vmr2007-051-006_a

1. *Arrow printed on belt*
2. *Drive pulley (front)*
3. *Driven pulley (rear)*
4. *Rotation direction*

NOTE: Turn the driven pulley until the lowest portion of the cogs on the external surface of drive belt is even with the driven pulley edge.

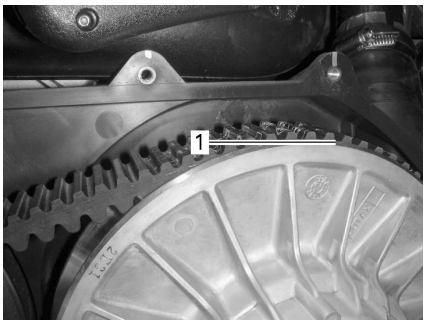

tmo2013-003-060_a

1. *Lowest portion of cogs even with external surface of drive belt*

Exhaust Area

Exhaust Area Access

To access exhaust area, refer to *CVT COVER ACCESS* for removal of LH lateral console panel and underseat compartment on driver's side

Exhaust Area Cleaning

⚠ WARNING

Engine and exhaust must be cool before removing debris. Always wear protective gloves when removing debris.

1. Wearing gloves, hand remove all excess debris around exhaust.

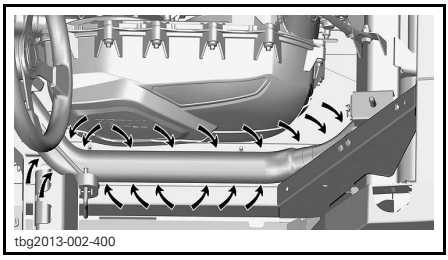
tbg2013-002-400

2. Using a garden hose, thoroughly clean the area so that no more debris can be in contact with the exhaust.

Battery

Battery Maintenance

NOTICE **Never charge a battery while installed in vehicle.**

These vehicles are equipped with a VRLA battery (Valve Regulated Lead Acid). It is a maintenance-free type battery, there is no need to add water to adjust electrolyte level.

NOTICE **Never remove the battery sealing cap.**

Battery Removal

Disconnect BLACK (-) cable first then RED (+) cable.

NOTICE **Always respect this order for disassembly; disconnect BLACK (-) cable first.**

Remove battery holder retaining screw.

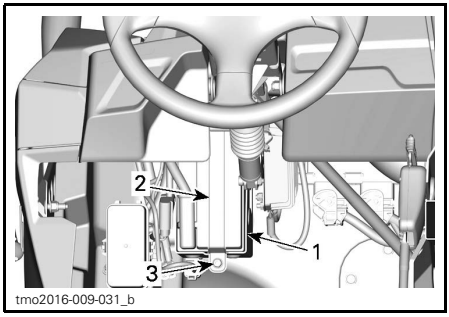

tmo2016-009-031_b

1. *Battery*
2. *Battery holder retaining screw*
3. *Battery holder*

Remove battery holder.

Remove battery.

Battery Cleaning

Clean battery, battery casing and battery posts using a solution of baking soda and water.

Remove corrosion from battery cable terminals and battery posts using a firm wire brush. Battery casing should be cleaned by soft brush and baking soda solution.

Battery Installation

Battery installation is the reverse of the removal procedure.

NOTICE **Improper orientation of the battery cables (reverse polarity) will result in damage to the voltage regulator.**

⚠ CAUTION **Always connect RED (+) cable first then BLACK (-) cable.**

Fuses

Fuse Replacement

If a fuse is burnt, replace it by one of the same rating.

NOTICE Do not use a higher rated fuse as this can cause severe damage.

Fuse Box Location

The vehicle is equipped with two fuse boxes. They are both located under the console on the driver's side next to the battery.

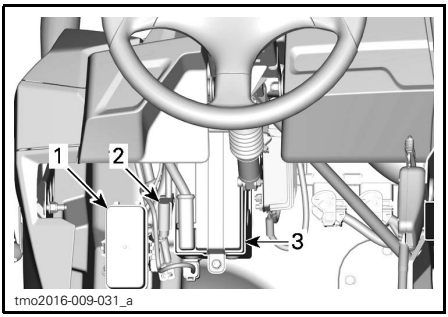

1. *Fuse box*
2. *DPS fuse*
3. *Battery*

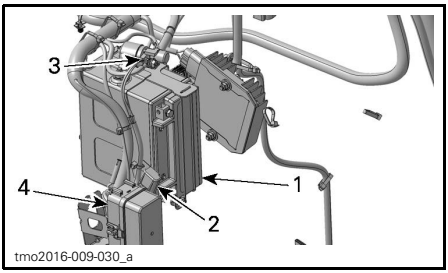

TYPICAL FOR ILLUSTRATIVE PURPOSES

1. *Battery*
2. *DPS fuse*
3. *Fuse links*
4. *Fuse box*

Fuse Box Description

MAIN FUSE BOX		
NO	DESCRIPTION	RATING
R1	Fan relay	-
R2	Main relay	-
R3	Accessories relay	-
R4	Light relay	-

MAIN FUSE BOX		
NO	DESCRIPTION	RATING
R8	Brake relay	-
F4	Speedo/tail lamp	10 A
F5	Ignition/injection/speed sensor	7.5 A
F6	Engine Control Module (ECM)	5 A
F7	4WD Actuator (winch if equipped)	5 A
F8	Key switch/starter solenoid/clock	5 A
F9	Fan	25 A
F10	European component	5 A
F11	Head lamp	30 A
F12	DC Outlet	15 A
F13	Relay driver	5 A
F14	Accessories	15 A
F15	Fuel pump	5 A

NOTE: Fuses are identified inside fuse box cover.

FUSE LINKS		
FUSE LINK	DESCRIPTION	RATING
1	Main	16 awg
2	Light/Accessories	14 awg
3	ACS/Power Add-on	16 awg

FUSE IN FUSE BOX 3		
F1	Dynamic power steering (DPS) (Models with DPS)	40 A

Lights

Always check light operation after replacement.

Headlight Bulb Replacement

NOTICE **Never touch glass portion of a halogen bulb with bare fingers, it shortens its operating life. If glass is touched, clean it with isopropyl alcohol which will not leave a film on the bulb.**

Unplug connector from bulb.

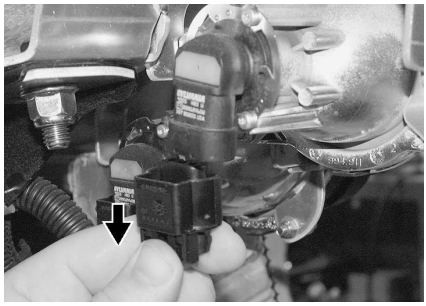

vmr2007-050-006_a

TYPICAL

Rotate bulb.

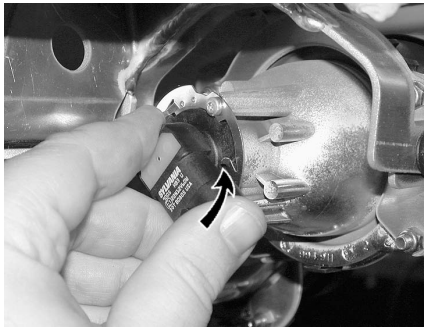

vmr2007-050-007_a

TYPICAL

Pull out bulb.

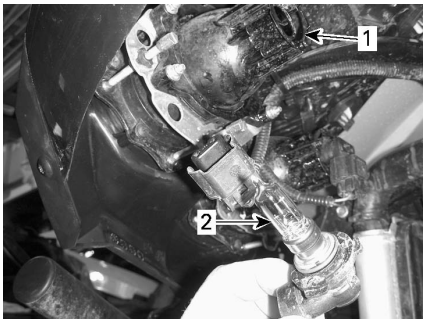

tmo2011-001-114_a

1. *Light bulb socket*
2. *Light bulb*

Properly reinstall removed parts in the reverse order of their removal.

Validate headlights operation.

Headlight Beam Aiming

Turn adjustment screws to adjust beam height to your convenience.

NOTE: Adjust headlights evenly.

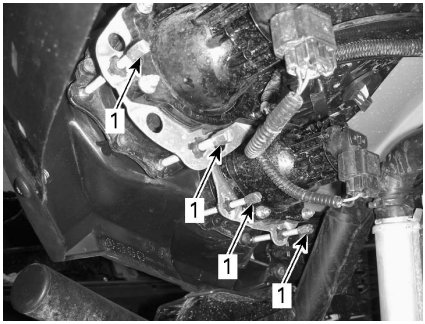

tmo2011-001-113_a

1. *Adjustment screws*

Taillight Bulbs Replacement

Open upper tailgate.

Remove both taillight retaining screws.

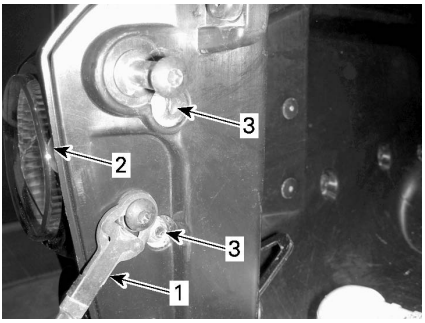

tmo2011-001-115_a

TYPICAL
1. *Tailgate cable*
2. *Tail light*
3. *Retaining screws*

Pull tail light out of its location.

Remove bulb socket from taillight.

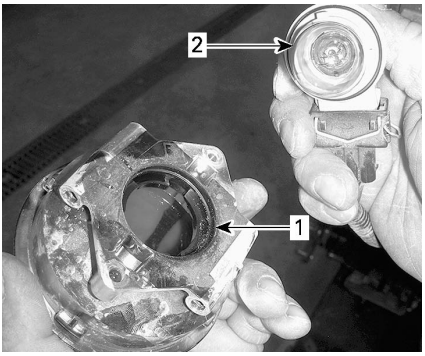

tmo2011-001-116_a

1. *Tail light*
2. *Light bulb and socket*

Push the bulb in and hold while turning counterclockwise to release.

Installation is the reverse of the removal procedure.

Position Lights Bulbs Replacement

Pull bulb out.

Installation is the reverse of removal.

Drive Shaft Boot and Protector

Drive Shaft Boot and Protector Inspection

Visually inspect drive shaft protectors and boots conditions.

Check protectors for damage or rubbing against shafts.

Check boots for cracks, tears, leaking grease, etc.

Repair or replace damaged parts as necessary.

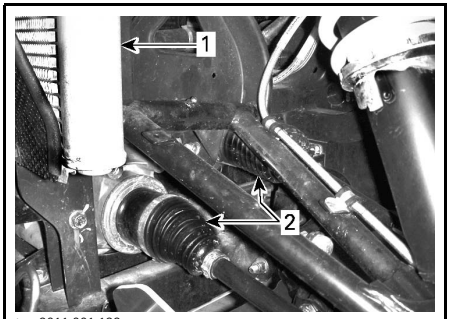

tmo2011-001-129_a

FRONT OF VEHICLE
1. *Radiator*
2. *Inner drive shaft boots*

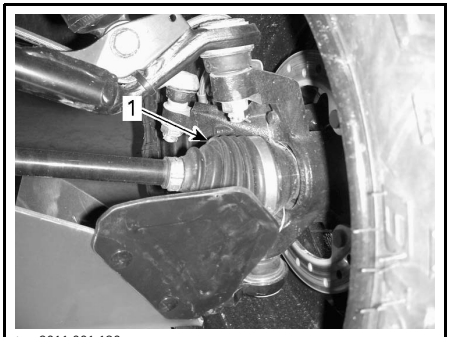

tmo2011-001-130_a

FRONT OF VEHICLE
1. *Outer drive shaft boot*

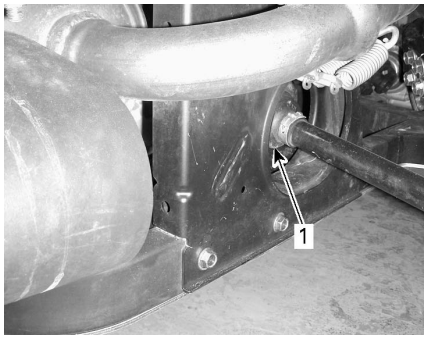

tmo2011-001-128_a

REAR OF VEHICLE
1. Inner drive shaft boot

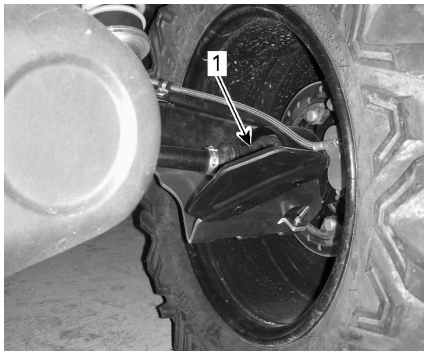

tmo2011-001-127_a

REAR OF VEHICLE
1. Outer drive shaft boot

Wheel Bearing

Wheel Bearing Inspection

Lift and support vehicle. Refer to *LIFTING AND SUPPORTING THE VEHICLE* in *VEHICLE INFORMATION SECTION*.

Push and pull the wheels from the upper edge to feel the play.

See an authorized Can-Am dealer if there is any play.

tmo2011-001-131_a

TYPICAL

Wheels and Tires

Wheel Removal

Loosen nuts then lift and support vehicle. Refer to *LIFTING AND SUPPORTING VEHICLE* in *VEHICLE INFORMATION*.

Remove nuts then remove wheel.

Wheel Installation

At installation, it is recommended to apply anti-seize lubricant on threads.

The tires are unidirectional and their rotation must be kept in a specific direction for proper operation.

Torque wheel nuts in accordance with the following illustration.

TORQUE	
WHEEL LUG NUTS	100 N•m ± 10 N•m (74 lbf•ft ± 7 lbf•ft)

tmo2011-001-081_a

TIGHTENING SEQUENCE

NOTICE Always use the recommended wheel nuts for the type of wheel. Using a different nut could cause damages to the rim or studs.

Tire Pressure

⚠ WARNING

Tire pressure greatly affects vehicle handling and stability. Insufficient pressure may cause tire to deflate and rotate on wheel. Overpressure may burst the tire. Always follow recommended pressure. NEVER set tire pressure below minimum. It could cause the tire to dislodge from the rim.

Check pressure when tires are **cold** before using the vehicle. Tire pressure changes with temperature and altitude. Recheck pressure if one of these conditions has changed.

For your convenience, a pressure gauge is supplied in tool kit.

TIRE PRESSURE		
	FRONT	REAR
MIN.	69 kPa (10 PSI)	83 kPa (12 PSI)
MAX. (Use when total load is greater than 180 kg (400 lb))	83 kPa (12 PSI)	152 kPa (22 PSI)

NOTE: Although the tires are specifically designed for off-road use, a flat may still occur. Therefore, it is recommended to carry a tire pump and a repair kit.

Tire Inspection

Check tire for damage and wear. Replace if necessary.

⚠ WARNING

Do not rotate tires. The front and rear tires have a different size. The left and right tires have different unidirectional tread patterns.

Tire Replacement

Tires replacement should be performed by an authorized Can-Am dealer.

⚠ WARNING

- **Replace tires only with the same type and size as original tires.**
- **For unidirectional tread pattern, ensure that the tires are installed in the correct direction of rotation.**
- **Tires should be replaced, by an experienced person, in accordance with tire industry standards and tools.**

Tire Mounting on Beadlock Wheels (XT-P Models Only)

1. Mount the tire on wheel.
   1.1 On the opposite side of beadlock, apply tire mounting lube on inner bead of tire and wheel to ensure proper seat when inflating. Mount the inner bead over the wheel like normal.

   NOTICE **Mount tire from beadlock side only.**

   1.2 Seat tire outer bead in the shoulder of the beadlock inner ring and center the tire.

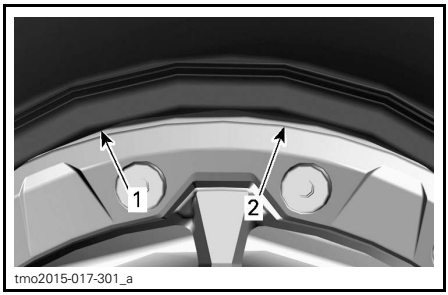

TYPICAL
1. Tire outer bead
2. Beadlock inner ring shoulder

2. Install all beadlock screws. To avoid cross threading, start all screws by hand.

NOTICE **Do not use an impact wrench for installing beadlock screws. The risk of screw breaking or screw stripping is high when using an impact wrench.**

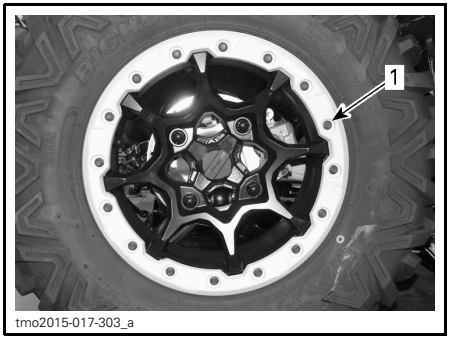

TYPICAL
1. Beadlock to be manually tightened

3. Tighten beadlock screws as per following specification and sequence.

NOTE: To ensure even pressure on the beadlock clamp ring, tighten screws **a few turns at a time**.

TIGHTENING TORQUE	
Beadlock screws (FIRST TORQUE)	3 N•m ± 1 N•m (27 lbf•**in** ± 9 lbf•**in**)

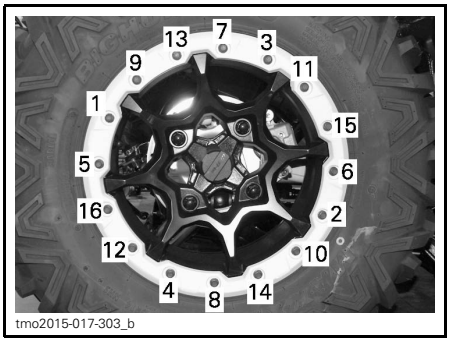

TYPICAL - TIGHTENING SEQUENCE

4. At this time check if the tire is still centered on wheel. Reposition it if necessary.
5. Tighten beadlock screws as per the **second** torque using the same sequence.

TIGHTENING TORQUE	
Beadlock screws (SECOND TORQUE)	8 N•m ± 1 N•m (71 lbf•**in** ± 9 lbf•**in**)

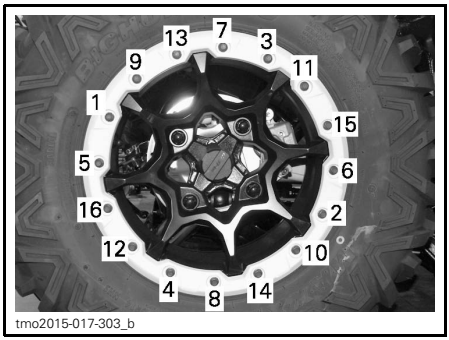

TYPICAL - TIGHTENING SEQUENCE

NOTE: The beadlock clamp ring should be in contact with the beadlock inner ring. The beadlock clamp ring can flex slightly to match the tire bead. IT IS NORMAL.

6. Verify the gap between tire and beadlock clamp ring, it should be practically equal all around the ring.

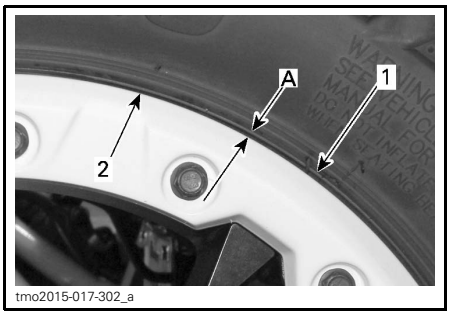

TYPICAL
1. Tire
2. Beadlock clamp ring edge
A. Gap equal all around beadlock clamp ring

If the gap is not acceptable,

– Loosen all screws.
– Check tire position on wheel and reposition it if necessary.
– Restart the torquing sequence as detailed.

7. Torque beadlock screws a **final** time following the indicated sequence.

TIGHTENING TORQUE	
Beadlock screws (FINAL TORQUE)	11 N•m ± 1 N•m (97 lbf•**in** ± 9 lbf•**in**)

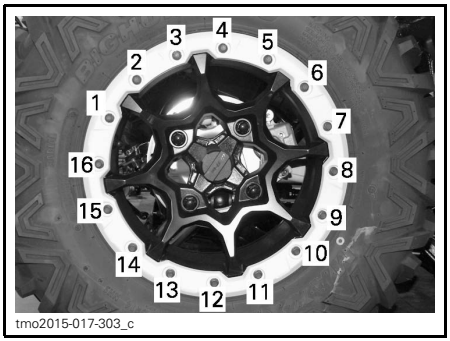

TYPICAL - FINAL TIGHTENING SEQUENCE

8. Inflate tire to seat the inner bead on wheel. Always use safe practices, such as a tire safety cage.

⚠ WARNING

Never exceed tire's recommended maximum pressure for seating beads.

Suspensions

Front Suspension Lubrication

Use SUSPENSION GREASE (P/N 293 550 033) or an equivalent.

Lubricate front A-arms.

There are three grease fittings on each A-arm oriented downwards.

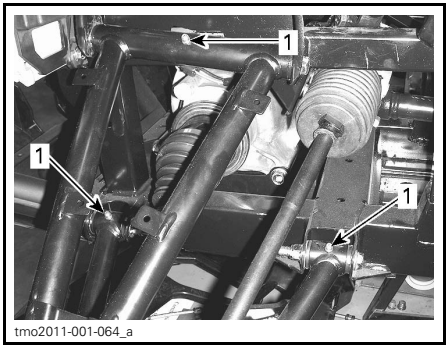

FRONT SUSPENSION - TYPICAL
1. *Grease fittings*

Suspension Inspection

See an authorized Can-Am dealer if any problem is detected.

Shock Absorbers

Inspect shock absorber for leaks, bump stop wear out or other damages. Verify fasteners are still well tightened.

Front A-Arms

Check A-arms for cracks, bending or other damages.

Rear Trailing Arms

Check trailing arms for distortion, cracks or bending.

ACS Air Filter

ACS Air Filter Access

To access to ACS air filter, remove the following:
- Driver's seat
- LH lateral console panel
- Floor panel.

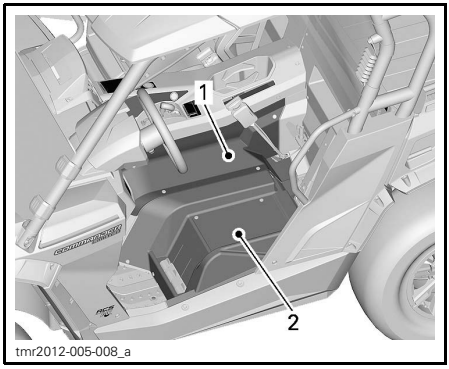

SIDE NET REMOVED FOR CLARITY
1. *LH lateral console panel*
2. *Floor panel*

The ACS compressor is located in front of air reservoirs.

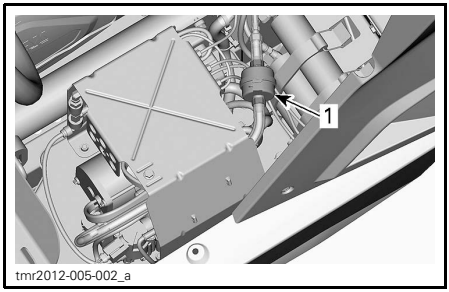

1. *ACS air filter*

ACS Air Filter Replacement

1. Remove and discard clamps securing hoses to air filter.

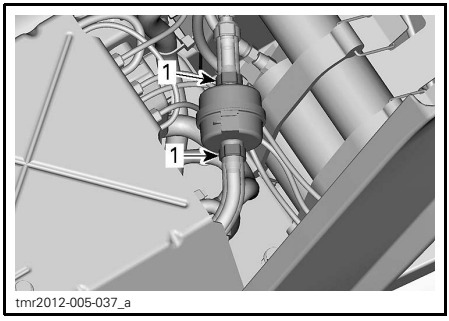

1. *Clamps to be removed*

2. Remove the air filter.

3. Install the new air filter with its attachment towards the compressor.
4. Secure air filter using **new** clamps.

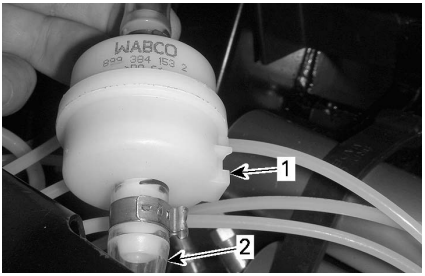

tmr2012-005-038_a

1. Air filter attachment
2. Air hose from compressor

ACS Hoses and Fittings

ACS Hoses and Fittings Inspection

Check shock hoses for damage.

Check shock fittings for damage.

Check hoses and fittings for air leaks.

Brakes

Brake Fluid Reservoir Level Verification

With vehicle on a level surface, check brake fluid in reservoir for proper level. Brake fluid level should be between MIN.and MAX. marks.

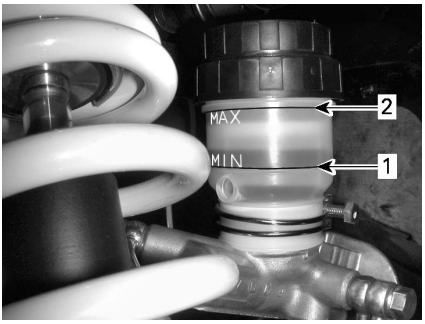

tmo2011-001-083_a

TYPICAL
1. MIN
2. MAX

NOTE: A low level may indicate leaks or worn brake pads.

Adding Brake Fluid

Clean filler cap before removing.

Add fluid as required. **Do not overfill.**

NOTE: Ensure filler cap diaphragm is pushed inside the cap before closing the brake fluid reservoir.

Recommended Brake Fluid

Always use brake fluid meeting the specification DOT 4 only.

⚠ WARNING

To avoid serious damage to the braking system, do not use fluids other than the recommended one, nor mix different fluids for topping up.

Brake Inspection

The brake inspection, maintenance and repair should be performed by an authorized Can-Am dealer.

However, verify the following between visits to your dealer:

- Brake fluid level
- Brake system for fluid leaks
- Brake pad wear
- Brake cleanliness.

⚠ WARNING

The brake fluid replacement or brake system maintenance and repairs should be performed by an authorized Can-Am dealer.

Seat Belts

Seat Belt Cleaning

To clean dirt and debris from the seat belts, sponge the straps with mild soap and water. Do not use bleach, dye, or household detergents.

⚠ WARNING

Do not use pressure washer to clean seat belt components. Use of pressure washer can permanently damage seat belt components.

Post-Operation Care

When vehicle is used in salt-water environment rinsing the vehicle with fresh water is necessary to preserve vehicle and its components. Metallic parts lubrication is highly recommended. Use XPS LUBE (P/N 293 600 016) or an equivalent. This must be performed at the end of each operating day.

When vehicle is operated in muddy conditions, rinsing the vehicle is recommended to preserve vehicle and its components.

Vehicle Cleaning and Protection

Never use a high pressure washer to clean the vehicle. **USE LOW PRESSURE ONLY (like a garden hose).** High pressure can cause damage to electrical or mechanical components.

Pay attention to certain areas where mud or debris can accumulate and potentially cause wear, interferences or promote corrosion. The list includes but is not limited to:

- Around exhaust system and between muffler and muffler cover
- Under and around the fuel tank
- Radiator
- Shock absorbers
- Around front and rear differentials
- Around and underneath engine and gearbox
- Inside wheels
- On top of skid plates.

Painted parts which are damaged should be properly repainted to prevent rust.

When required, wash the body with warm water and soap (only use mild detergent). Apply non-abrasive wax.

NOTICE **Never clean plastic parts with strong detergent, degreasing agent, paint thinner, acetone, etc.**

STORAGE AND PRESEASON PREPARATION

When a vehicle is not in use for more than 4 months, proper storage is a necessity.

When using your vehicle after storage, a preparation is required.

See an authorized Can-Am dealer, repair shop, or person of your own choosing to have your vehicle prepared for either storage or the preseason.

This page is intentionally blank

TECHNICAL INFORMATION

VEHICLE IDENTIFICATION

The main components of your vehicle (engine and frame) are identified by different serial numbers. It may sometimes become necessary to locate these numbers for warranty purposes or to trace your vehicle in the event of loss. These numbers are required by the authorized Can-Am dealer to complete warranty claims properly. We strongly recommend that you take note of all the serial numbers on your vehicle and supply them to your insurance company.

Vehicle Identification Number

TYPICAL — VEHICLE SERIAL NUMBER LABEL UNDER GLOVE BOX

Engine Identification Number

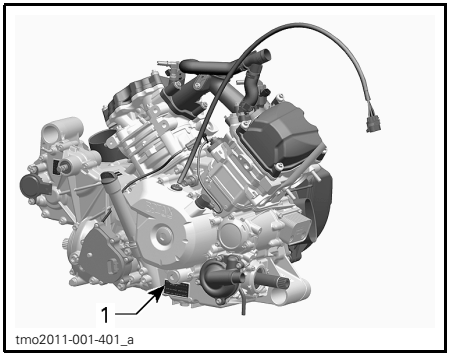

TYPICAL — ENGINE SERIAL NUMBER LABEL

1. EIN (Engine Identification Number)

NOISE EMISSION CONTROL SYSTEM REGULATION

USA and Canada Only

Tampering with Noise Control System Is Prohibited!

U.S. Federal law and Canadian provincial laws may prohibit the following acts or the causing there of:

1. The removal or rendering inoperative by any person other than for purposes of maintenance, repair or replacement of any device or element of design incorporated into any new vehicle for the purpose of noise control prior to its sale or delivery to the ultimate purchaser or while it is in use or
2. The use of the vehicle after such device or element of design has been removed or rendered inoperative by any person.

Among those Acts Presumed to Constitute Tampering Are the Acts Listed Below:

1. Removal or alteration or the puncturing of the muffler or any engine component which conducts removal of engine exhaust gases.
2. Removal or alteration or the puncturing of any part of the intake system.
3. Replacing any moving parts of the vehicle or parts of the exhaust or intake system, with parts other than those specified by the manufacturer.
4. Lack of proper maintenance.

The EC-Declaration of Conformity does not appear in this version of the Operator's Guide.

Please refer to the printed version that was delivered with your vehicle.

SPECIFICATIONS

MODEL		800R	1000
ENGINE			
Engine type		ROTAX® 800R	ROTAX® 1000
		4-stroke, Single Over Head Camshaft (SOHC), liquid cooled	
Number of cylinders		2	
Number of valves		8 valves (mechanical adjustment)	
Bore		91 mm (3.58 in)	91 mm (3.58 in)
Stroke		61.5 mm (2.42 in)	75 mm (2.95 in)
Displacement		799.9 cm^3 (48.81 in^3)	976 cm^3 (59.56 in^3)
Exhaust system		Spark arrester approved by USDA Forest Service	
Engine air filter		Synthetic paper filter	
LUBRICATION SYSTEM			
Type		Wet sump. Replaceable oil filter	
Oil filter		BRP Rotax® paper type, replaceable	
Engine oil	Capacity (oil change with filter)	2 L (2.1 qt (U.S. liq.))	
	Recommended	For the summer season, use XPS 4-STROKE SYNTH. BLEND OIL (P/N 293 600 121). For the winter season, use XPS 4-STROKE SYNTHETIC OIL (P/N 293 600 112). If not not available, use a 5W 40 motor oil that meets the requirements for API service classification SM, SL or SJ	
COOLING SYSTEM			
Coolant	Type	Ethyl glycol/water mix (50% coolant, 50% water). Use LONG LIFE ANTIFREEZE (P/N 219 702 685) or coolant specifically designed for aluminum engines	
	Capacity	3.85 L (1.02 U.S. gal.)	4.25 L (1.12 U.S. gal.)
CVT TRANSMISSION			
Type		CVT (Continuously Variable Transmission)	
Engagement RPM		1800 RPM	
GEARBOX			
Type		Dual range (HI-LO) with PARK, neutral and reverse	
Gearbox oil	Capacity	450 ml (15 U.S. oz)	
	Recommended	XPS synthetic gear oil (P/N 293 600 140) or a 75W 140 API GL-5	

MODEL		800R	1000
ELECTRICAL SYSTEM			
Magneto generator output		625 W @ 6000 RPM	
Ignition system type		IDI (Inductive Discharge Ignition)	
Ignition timing		Not adjustable	
Spark plug	Quantity	2	
	Make and type	NGK DCPR8E or equivalent	
	Gap	0.7 mm to 0.8 mm (.028 in to .031 in)	
Engine RPM limiter setting		8000 RPM	
Battery	Type	Dry battery type	
	Voltage	12 volts	
	Nominal rating	18 A•h	
	Power starter output	0.7 KW	
Headlights		4 x 60 W	
Taillight		2 x 5/21 W	
Fuses	Main	16 awg	
	Accessories (main)	14 awg	
	ACS (if equipped)	16 awg	
	DPS (if equipped)	40 A	
	Speedometer/tail lamp	10 A	
	Ignition/injection/speed sensor	7.5 A	
	Engine control module (ECM)	5 A	
	4WD Actuator (winch if equipped)	5 A	
	Key switch	5 A	
	Fan (fuse breaker)	25 A	
	European component	5 A	
	Head lamp	30 A	
	DC Outlet	15 A	
	Relay Driver	5 A	
	Accessories	15 A	
	Fuel pump	5 A	

MODEL			800R	1000
FUEL SYSTEM				
Fuel delivery	Type		Electronic fuel injection (EFI) with iTC	
Throttle body			54 mm with ETA	
Fuel pump	Type		Electric (in fuel tank)	
Idle speed			1250 ± 100 RPM (not adjustable)	
Fuel	Type		Regular unleaded gasoline	
	Minimum octane		87 Pump Posted AKI (92 RON) - Refer to *FUEL REQUIREMENTS*	
Fuel tank capacity			37.8 L (10 U.S. gal.)	
Fuel remaining when low fuel light turns ON			± 12 L (3.2 U.S. gal.)	
DRIVE SYSTEM				
Drive system type			Selectable 2WD/4WD	
Front Differential oil/rear final drive oil	Capacity	Front	500 ml (17 U.S. oz)	
		Rear	280 ml (9.5 U.S. oz)	
	Type	Front	XPS Synthetic gear oil (75W 90 API GL-5) (P/N 293 600 043) or synthetic oil 75W 90 API GL5	
		Rear	XPS Synthetic gear oil (P/N 293 600 140) or a 75W 140 API GL-5 synthetic gear oil	
Front drive		Base	Visco-lok† front differential	
		All models except Base	Visco-lok† QE front differential	
Front drive ratio			3.6:1	
Rear drive			Spiral bevel gears/final drive	
Rear drive ratio			3.6:1	
CV joint grease			CV joint grease (P/N 293 550 062)	
Propeller shaft grease			Propeller shaft grease (P/N 293 550 063)	
STEERING				
Steering wheel			Adjustable tilt steering	
Turning radius			244 cm (96.063 in)	
Total toe (vehicle on ground)			0° ± 0.2° (±)	
Camber angle (vehicle on ground)			0.7° positive	

MODEL			800R	1000
FRONT SUSPENSION				
Suspension type		All models except XT-P and LTD	Double suspension a-arm with dive-control geometry	
		XT-P	Double suspension a-arm with dive-control geometry with external sway-bar	
		LTD	Double suspension a-arm with dive-control geometry with ACS	
Preload adjustment type		All models except XT-P and LTD	5 positions cam	
		XT-P	Threaded	
		LTD	No preload adjustment	
Suspension travel			254 mm (10 in)	
Shock absorber	Qty		2	
	Type	All models except XT-P and LTD	Oil/5 spring preload settings	
		XT-P	HPG shock with piggyback reservoir. Dual speed compression damping and rebound damping adjustments	
		LTD	HPG shock with piggyback reservoir. Compression damping (low speed) and air pressure adjustments	
REAR SUSPENSION				
Suspension type		All models except LTD	Torsional Trailing arm Independant (TTI) with external sway bar	
		LTD	Torsional Trailing arm Independant (TTI) with external sway bar with ACS	
Preload adjustment type		All models except XT-P and LTD	5 positions cam	
		XT-P	Threaded	
		LTD	No preload adjustment	
Suspension travel			254 mm (10 in)	

MODEL			800R	1000
REAR SUSPENSION (cont'd)				
Shock absorber	Qty		2	
	Type	All models except XT-P and LTD	Oil/5 spring preload settings	
		XT-P	HPG shock with piggyback reservoir. Dual speed compression damping and rebound damping adjustments	
		LTD	HPG shock with piggyback reservoir. Compression damping (low speed) and air pressure adjustments	
BRAKES				
Front brake	Type		Dual 214 mm ventilated disc brakes with hydraulic twin-piston calipers	
Rear brake	Type		Single 214 mm ventilated disc brake with hydraulic twin-piston caliper	
Brake fluid	Capacity		250 ml (8.5 U.S. oz)	
	Type		DOT 4	
Caliper			Floating	
Brake pad material	Front		Metallic	
	Rear		Metallic	
Minimum brake pad thickness			1 mm (.039 in)	
Minimum brake disc thickness	Front		4 mm (.157 in)	
	Rear		4 mm (.157 in)	
Maximum brake disc warpage			0.2 mm (.01 in)	
TIRES				
Pressure	Front		Maximum: 83 kPa (12 PSI) Minimum: 69 kPa (10 PSI)	
	Rear		Maximum: 152 kPa (22 PSI) Minimum: 83 kPa (12 PSI)	
Minimum tire thread depth			3 mm (.118 in)	
Tire size	Front	Base/XT-P	27 x 9 x 12 (in)	
		Al models except Base and XT-P	27 x 9 x 14 (in)	
	Rear	Base/XT-P	27 x 11 x 12 (in)	
		Al models except Base and XT-P	27 x 11 x 14 (in)	

MODEL			800R	1000
WHEELS				
Type		Base	Steel	
		XT-P	Aluminum beadlock wheels	
		All models except Base and XT-P	Cast Aluminum	
Rim size	Front	Base	12 x 6 (in)	
		XT-P	12 x 6 (in)	
		All models except Base and XT-P	14 x 7 (in)	
	Rear	Base	12 x 8 (in)	
		XT-P	12 x 7.5 (in)	
		All models except Base and XT-P	14 x 8.5 (in)	
Wheel nuts torque			100 N•m ± 10 N•m (74 lbf•ft ± 7 lbf•ft)	
CHASSIS				
Cage type			50 mm (2 in) diameter, high strength steel, ROPS-approved cage	
DIMENSIONS				
Overall length		Base DPS	300.4 cm (118.3 in)	
		All models except Base and DPS	305.3 cm (120.2 in)	
Overall width		Base/DPS	148.9 cm (58.6 in)	
		All models except Base and DPS	158.7 cm (62.5 in)	
Overall height			182.9 cm (72 in)	
Wheelbase			192.4 cm (75.8 in)	
Wheel track	Front		125.7 cm (49.5 in)	
	Rear		121.9 cm (48 in)	
Ground clearance		All models except Mossy Oak Hunting Edition	27.9 cm (11 in)	
		Mossy Oak Hunting Edition	25.4 cm (10 in)	

MODEL			800R	1000
LOADING CAPACITY AND WEIGHT				
Dry weight			584 kg (1,287 lb)	
Weight distribution (front/rear)			44/56	
Cargo box capacity	Total		272 kg (600 lb)	
	Upper		181 kg (400 lb)	
	Lower		272 kg (600 lb)	
Total vehicle load allowed (including driver, passenger, all other loads and added accessories)		All models except LTD and Mossy Oak Hunting Edition	363 kg (800 lb)	
		LTD model	340 kg (750 lb)	
		Mossy Oak Hunting Edition	321 kg (707 lb)	
Gross vehicle weight rating		Base	992 kg (2,186 lb)	-
		DPS	1 002 kg (2,209 lb)	
		XT	1 044 kg (2,302 lb)	
		XT-P	-	1 047 kg (2,308 lb)
		LTD	-	1 061 kg (2,339 lb)
		Mossy Oak Hunting Edition	-	1 061 kg (2,339 lb)
Towing capacity			680 kg (1,500 lb)	
Hitch support			50.8 mm (2 in) x 50.8 mm (2 in)	

This page is intentionally blank

TROUBLESHOOTING

TROUBLESHOOTING GUIDELINES

CVT BELT IS SLIPPING

1. Water has entered in the CVT.
   – *Refer to SPECIAL PROCEDURES subsection.*

E IS DISPLAYED ON TRANSMISSION POSITION DISPLAY

1. Shift lever is between 2 positions.
   – *Properly position the shift lever in the desired position.*
2. Shift lever is not properly adjusted.
   – *Contact an authorized Can-Am dealer.*
3. Electrical communication error.
   – *Contact an authorized Can-Am dealer.*

ENGINE DOES NOT TURN

1. Ignition switch is in the OFF position.
   – *Place switch to either ON position.*
2. Shift lever is not set on PARK or NEUTRAL.
   – *Set shift lever to either in PARK or in NEUTRAL or press the brake pedal.*
3. Burnt fuse.
   – *Check fuses.*
4. Weak battery or loose connections.
   – *Check charging system fuse.*
   – *Check fault message in cluster.*
   – *Check battery connections and terminals condition.*
   – *Have the battery checked by an authorized Can-Am dealer.*
5. Defective engine start button.
   – *Contact an authorized Can-Am dealer.*
6. Defective starter solenoid.
   – *Contact an authorized Can-Am dealer.*
7. D.E.S.S. key not recognized is displayed in the multifunction gauge.
   – *Clean D.E.S.S. key.*

ENGINE TURNS OVER BUT FAILS TO START

1. **Flooded engine (spark plug wet when removed).**
   – *(If the engine does not start and it is fuel-flooded, the drowned mode can be activated to prevent fuel injection and to cut ignition while cranking. Proceed as follows:*
   • Insert key in ignition switch and turn to either ON position.
   • Press completely and HOLD accelerator pedal.
   • Press the engine START button.
   The engine should be cranked for 10 seconds. Release engine START button.
   Release accelerator pedal and start/crank engine again to allow starting.
   If it does not work:
   • Remove the spark plugs (tools are supplied in tool kit). Refer to SPARK PLUGS in the MAINTENANCE PROCEDURES section.
   • Crank engine several times.
   • Install new spark plugs if possible or clean and dry spark plugs.
   • If engine does not start, seek service from an authorized Can-Am dealer, repair shop, or person of your own choosing for maintenance, repair, or replacement. Please refer to the US EPA EMISSIONS-RELATED WARRANTY contained herein for information about warranty claims.

2. **No fuel to the engine (spark plug dry when removed).**
   – *Check fuel tank level.*
   – *Check fuel pump fuse.*
   – *Obstructed fuel pump pre-filter or fuel pump failure. Seek service from an authorized Can-Am dealer, repair shop, or person of your own choosing for maintenance, repair, or replacement. Please refer to the US EPA EMISSIONS-RELATED WARRANTY contained herein for information about warranty claims.*

3. **Spark plug/ignition (no spark).**
   – *Check ignition fuse.*
   – *Remove spark plug then reconnect to ignition coil.*
   – *Start engine with spark plug grounded to the engine away from spark plug hole. If no spark appears, replace spark plug.*
   – *If trouble persists, seek service from an authorized Can-Am dealer, repair shop, or person of your own choosing for maintenance, repair, or replacement. Please refer to the US EPA EMISSIONS-RELATED WARRANTY contained herein for information about warranty claims.*

ENGINE LACKS ACCELERATION OR POWER

1. **Seat belt not buckled properly. Check cluster message.**
   – *Buckle up seat belt.*

2. **Fouled or damaged spark plug.**
   – *Replace spark plugs.*

3. **Engine air filter plugged or dirty.**
   – *Check air filter and replace if necessary.*
   – *Check deposits in engine air filter housing.*

ENGINE LACKS ACCELERATION OR POWER (cont'd)

4. Water in CVT
   – *Drain water from CVT. Refer to SPECIAL PROCEDURES subsection.*
5. CVT dirty or worn-out.
   – *Contact an authorized Can-Am dealer.*
6. Lack of fuel
   – *Dirty or clogged fuel pump pre-filter. Seek service from an authorized Can-Am dealer, repair shop, or person of your own choosing for maintenance, repair, or replacement. Please refer to the US EPA EMISSIONS-RELATED WARRANTY contained herein for information about warranty claims.*
7. Engine is in limp home mode.
   – *Check multifunction gauge display for messages.*
   – *Multifunction gauge CHECK ENGINE indicator lamp is on and display shows LIMP HOME, seek service from an authorized Can-Am dealer, repair shop, or person of your own choosing for maintenance, repair, or replacement. Please refer to the US EPA EMISSIONS-RELATED WARRANTY contained herein for information about warranty claims.*

ENGINE OVERHEATS

1. Low coolant level in cooling system.
   – *Check coolant level and refill. See MAINTENANCE PROCEDURES. Seek service from an authorized Can-Am dealer, repair shop, or person of your own choosing for maintenance, repair, or replacement. Please refer to the US EPA EMISSIONS-RELATED WARRANTY contained herein for information about warranty claims*
2. Cooling fan is not working.
   – *Ensure cooling fan is not jammed and working properly.*
   – *Check fan fuse. See FUSES in the MAINTENANCE PROCEDURES subsection.*
3. Dirty radiators fins.
   – *Check and clean radiator fins. See MAINTENANCE PROCEDURES subsection.*

ENGINE MISFIRE

1. Fouled/damaged/worn spark plug.
   – *Replace spark plugs as required.*
2. Water in fuel.
   – *Drain fuel system and refill with fresh fuel.*

THE RPM INCREASES BUT THE VEHICLE DOES NOT MOVE

1. Water in the CVT.
   – *Drain water from CVT. See SPECIAL PROCEDURES subsection.*
2. CVT dirty or worn-out or belt failure.
   – *Contact an authorized Can-Am dealer.*

PARTIAL OR NO RESPONSE FROM THE ACCELERATOR PEDAL INPUTS (CHECK ENGINE IS ON AND PPS FAULT MESSAGE IS DISPLAYED)

1. Partial failure of the accelerator pedal sensors (PPS).
   – *Use the override switch to retrieve accelerator pedal normal operation. Contact an authorized Can-Am dealer.*
2. Total failure of the accelerator pedal sensors (PPS).
   – *Use the override switch to bypass the accelerator pedal in order to move vehicle. Contact an authorized Can-Am dealer.*

ACS OVERHEAT IS DISPLAYED IN GAUGE

1. ACS compressor was used too much over a short period of time.
   – *Wait for overheat message* ACS OVERHEAT *to disappear from display.*
   – *If message does not disappear, contact an authorized Can-Am dealer.*

ACS FAULT IS DISPLAYED IN GAUGE

1. A leak or problem in the ACS system is detected.
   – *Contact an autorized Can Am dealer.*

MESSAGES IN MULTIFUNCTION GAUGE

If an abnormal engine condition occurs, the following messages can be combined with a pilot lamp.

MESSAGE	DESCRIPTION
D.E.S.S. KEY NOT RECOGNIZED	D.E.S.S. key requires cleaning.
BAD KEY	Wrong key used in the ignition switch. Use the right key for the vehicle.
CHECK ENGINE	All active or previously activated faults that require attention. No engine limitation engaged.
LIMP HOME	Critical faults requiring diagnostic as soon as possible. An engine limitation is engaged and/or the engine behavior is modified.
ECM CRC ERROR	Error message from ECM.
TPS FAULT	Throttle body fault, generally followed by a Limp Home message.
BRAKE SWITCH FAULT	Brake signal fault.
ECM NOT RECOGNIZED	Message displayed when the gauge is unable to identify the ECM.
CHECK DPS (models with DPS)	Check engine pilot light on. Indicates that the DPS (Dynamic Power Steering) does not work properly. See an authorized Can-Am dealer.
TRANSMISSION SIGNAL FAULT	Gearbox position sensor fault active. «E» is also displayed in the gear display.
PPS FAULT	When one or both sensor of the PPS is/are faulty, erratic or out of range or that the ratio between the two is incorrect, the message will be displayed and the check engine will be lit.
MANUAL LIMP HOME	When the PPS Limp Home is engaged, the message will be displayed.
FUEL SENDER RANGE PERFORMANCE	When the fuel sender resistor value is out of range the multifunction gauge (analog/digital) will detect it and display the message.
GEAR POSITION SENSOR FAULT	When the Gear signal is erroneous the gauge will display the message.
ACS FAULT (LTD model only)	Leak or problem detected in the ACS system.
ACS OVERHEAT (LTD model only)	ACS compressor overheated. Do not run compressor for more than 2 minutes. Let compressor cool down.

WARRANTY

BRP LIMITED WARRANTY USA AND CANADA: 2016 CAN-AM® SSV

1) SCOPE OF THE LIMITED WARRANTY

Bombardier Recreational Products Inc. ("BRP")* warrants its 2016 Can-Am side-by-side vehicles ("SSV") sold by authorized Can-Am SSV dealers (as hereinafter defined) in the United States of America ("USA") and in Canada from defects in material or workmanship for the period and under the conditions described below. This limited warranty will become null and void if: (1) the SSV was used for racing or any other competitive activity, at any point, even by a previous owner; or (2) the SSV has been altered or modified in such a way so as to adversely affect its operation, performance or durability, or has been altered or modified to change its intended use.

Except if otherwise specified, all genuine Can-Am SSV parts and accessories installed by an authorized BRP dealer on a 2016 Can-Am SSV at the time of delivery are covered under this limited warranty.

2) LIMITATIONS OF LIABILITY

THIS WARRANTY IS EXPRESSLY GIVEN AND ACCEPTED IN LIEU OF ANY AND ALL OTHER WARRANTIES, EXPRESSED OR IMPLIED, INCLUDING WITHOUT LIMITATION ANY WARRANTY OF MERCHANTABILITY OR FITNESS FOR A PARTICULAR PURPOSE. TO THE EXTENT THAT THEY CANNOT BE DISCLAIMED, THE IMPLIED WARRANTIES ARE LIMITED IN DURATION TO THE LIFE OF THE EXPRESS WARRANTY. INCIDENTAL AND CONSEQUENTIAL DAMAGES ARE EXCLUDED FROM COVERAGE UNDER THIS WARRANTY. SOME STATES/ PROVINCES DO NOT ALLOW FOR THE DISCLAIMERS, LIMITATIONS AND EXCLUSIONS IDENTIFIED ABOVE, AS A RESULT, THEY MAY NOT APPLY TO YOU. THIS WARRANTY GIVES YOU SPECIFIC RIGHTS, AND YOU MAY ALSO HAVE OTHER LEGAL RIGHTS WHICH MAY VARY FROM STATE TO STATE, OR PROVINCE TO PROVINCE.

Neither the distributor, any BRP dealer nor any other person has been authorized to make any affirmation, representation or warranty regarding the product, other than those contained in this limited warranty, and if made, shall not be enforceable against BRP. BRP reserves the right to modify this warranty at any time, being understood that such modification will not alter the warranty conditions applicable to the products sold while this warranty is in effect.

3) EXCLUSIONS – ARE NOT WARRANTED

The following are not warranted under any circumstances:

- Normal wear and tear;
- Routine maintenance items, tune ups, adjustments;
- Damage caused by failure to provide proper maintenance and/or storage, as described in the Operator's Guide;
- Damage resulting from removal of parts, improper repairs, service, maintenance, modifications or use of parts not manufactured or approved by BRP or resulting from repairs done by a person that is not an authorized servicing Can-Am SSV dealer;
- Damage caused by abuse, abnormal use, neglect or operation of the product in a manner inconsistent with the recommended operation described in the Can-Am SSV Operator's Guide;

– Damage resulting from accident, submersion, fire, theft, vandalism or any act of God;
– Operation with fuels, oils or lubricants which are not suitable for use with the product (see the Operator's Guide);
– Damages from rust, corrosion or exposure to the elements;
– Damage resulting from water or snow ingestion;
– Incidental or consequential damages, or damages of any kind including without limitation towing, storage, telephone, rental, taxi, inconvenience, insurance coverage, loan payments, loss of time, loss of income.

4) WARRANTY COVERAGE PERIOD

This warranty will be in effect from (1) the date of delivery to the first retail consumer or (2) the date the product is first put into use, whichever occurs first and for the following period:

– SIX (6) CONSECUTIVE MONTHS, for private use or commercial use owners. For emission-related components; please also refer to the *US EPA EMISSION-RELATED WARRANTY* contained herein.

The repair or replacement of parts or the performance of service under this warranty does not extend the life of this warranty beyond its original expiration date.

5) CONDITIONS TO HAVE WARRANTY COVERAGE

This warranty coverage is available **only** if **each** of the following conditions has been fulfilled:

– The 2016 Can-Am SSV must be purchased as new and unused by its first owner from a Can-Am SSV dealer authorized to distribute Can-Am SSV's in the country in which the sale occurred ("Can-Am SSV dealer");
– The BRP specified pre-delivery inspection process must be completed and documented and signed by the purchaser;
– The 2016 Can-Am SSV must have undergone proper registration by an authorized Can-Am SSV dealer;
– The 2016 Can-Am SSV must be purchased in the country in which the purchaser resides;
– Routine maintenance outlined in the Operator's Guide must be timely performed in order to maintain warranty coverage. BRP reserves the right to make warranty coverage contingent upon proof of proper maintenance.

BRP will not honor this limited warranty to any private use owner or commercial use owner if one of the preceding conditions has not been met. Such limitations are necessary in order to allow BRP to preserve both the safety of its products, and also that of its consumers and the general public.

6) WHAT TO DO TO OBTAIN WARRANTY COVERAGE

The customer must cease using the SSV upon the appearance of an anomaly. The customer must notify a servicing BRP dealer within three (3) days of the appearance of a defect, and provide it with reasonable access to the product and reasonable opportunity to repair it. The customer must also present to the authorized BRP dealer, proof of purchase of the product and must sign the repair/work order prior to starting the repair in order to validate the warranty repair. All parts replaced under this limited warranty become the property of BRP.

7) WHAT BRP WILL DO

BRP's obligations under this warranty are limited to, at its sole discretion, repairing parts found defective under normal use, maintenance and service, or replacing such parts with new genuine Can-Am SSV parts without charge for parts and labor, at any authorized BRP dealer during the warranty coverage period under the conditions described herein. BRP's responsibility is limited to making the required repairs or replacements of parts. No claim of breach of warranty shall be cause for cancellation or rescission of the sale of the SSV to the owner.

In the event that service is required outside of the country of original sale, the owner will bear responsibility for any additional charges due to local practices and conditions, such as, but not limited to, freight, insurance, taxes, license fees, import duties, and any and all other financial charges, including those levied by governments, states, territories and their respective agencies.

BRP reserves the right to improve or modify products from time to time without assuming any obligation to modify products previously manufactured.

8) SUPPLIER WARRANTIES

A GPS receiver may be supplied by BRP as standard equipment on certain 2016 Can-Am SSV. The GPS receiver is covered under the limited warranty issued by the GPS receiver's manufacturer and is not covered under this limited warranty. Please contact the following distributors if in Canada or the manufacturer if in the USA:

In the USA:
Garmin International Inc.
U.S.: 913 397-8200
U.S. Toll Free: 1 800 800-1020
Website: www.garmin.com

In Canada (one or the other):
Raytech Électronique
Tel.: 450 975-1015
Fax: 800 975-0025 / 450 975-0817
Contact: raytech@raytech.qc.ca
Web Site: www.raytech.qc.ca
Coord. GPS: N45o35.25' -W73o42.95'

Naviclub Ltd
Tel.: 418 835-9279
Fax: 418 835-6681
Contact: naviclub@naviclub.com
Web Site: www.naviclub.com

9) TRANSFER

If the ownership of a product is transferred during the warranty coverage period, this warranty shall also be transferred and be valid for the remaining coverage period provided that BRP is notified of such transfer of ownership in the following way:

1. The former owner contacts BRP (at the phone number provided below) or an authorized BRP dealer and gives the coordinates of the new owner; or
2. BRP or an authorized BRP dealer receives a proof that the former owner agreed to the transfer of ownership, in addition to the coordinates of the new owner.

10) CONSUMER ASSISTANCE

In the event of a controversy or a dispute in connection with this limited warranty, BRP suggests that you try to resolve the issue at the dealership level. We recommend discussing the issue with the authorized dealer's service manager or owner.

If the issue has not yet been resolved, please submit your complaint in writing or call the appropriate number below:

IN CANADA:

BOMBARDIER RECREATIONAL PRODUCTS INC.
CAN-AM SSV
CUSTOMER ASSISTANCE CENTER
75 J.-A. Bombardier Street
Sherbrooke, QC J1L 1W3
Tel.: 1-888-272-9222

IN USA:

BRP US Inc.
CAN-AM SSV
CUSTOMER ASSISTANCE CENTER
7575 Bombardier Court
Wausau WI 54401
Tel.: 1-888-272-9222

* In the USA, products are distributed and serviced by BRP US Inc.

© 2015 Bombardier Recreational Products Inc. All rights reserved.
® Trademark of Bombardier Recreational Products Inc. or its affiliates.

US EPA EMISSION-RELATED WARRANTY

Bombardier Recreational Products Inc. (“BRP”)* warrants to the ultimate purchaser and each subsequent purchaser that this new vehicle, including all parts of its exhaust emission control system and its evaporative emission control system, meets two conditions:

1. It is designed, built, and equipped so it conforms at the time of sale to the ultimate purchaser with the requirements of 40 CFR 1051 and 40 CFR 1060.
2. It is free from defects in materials and workmanship that may keep it from meeting the requirements of 40 CFR 1051 and 40 CFR 1060.

Where a warrantable condition exists, BRP will repair or replace, as it elects, any part or component with a defect in materials or workmanship that would increase the engine’s emissions of any regulated pollutant within the stated warranty period at no cost to the owner, including expenses related to diagnosing and repairing or replacing emission-related parts. All defective parts replaced under this warranty become the property of BRP.

For all emission-related warranty claims, BRP is limiting the diagnosis and repair of emission-related parts to the authorized Can-Am dealers, unless for emergency repairs as required by item 2 of the following list.

As a certifying manufacturer, BRP will not deny emission-related warranty claims based on any of the following:

1. Maintenance or other service BRP or BRP's authorized facilities performed.
2. Engine/equipment repair work that an operator performed to correct an unsafe, emergency condition attributable to BRP as long as the operator tries to restore the engine/equipment to its proper configuration as soon as possible.
3. Any action or inaction by the operator unrelated to the warranty claim.
4. Maintenance that was performed more frequently than BRP specify.
5. Anything that is BRP fault or responsibility.
6. The use of any fuel that is commonly available where the equipment operates unless BRP written maintenance instructions state that this fuel would harm the equipment’s emission control system and operators can readily find the proper fuel. See maintenance information section and fuel requirements of fueling section.

Emission-Related Warranty Period

The emission-related warranty is valid for the following period whichever comes first:

	HOURS	MONTHS	KILOMETERS
Exhaust emission-related components	500	30	5000
Evaporative emission-related components	N/A	24	N/A

Components Covered

The emission-related warranty covers all components whose failure would increase an engine's emissions of any regulated pollutant, including the following listed components:

1. For exhaust emissions, emission-related components include any engine parts related to the following systems:
   - Air-induction system
   - Fuel system
   - Ignition system
   - Exhaust gas recirculation systems
2. The following parts are also considered emission-related components for exhaust emissions:
   - Aftertreatment devices
   - Crankcase ventilation valves
   - Sensors
   - Electronic control units
3. The following parts are considered emission-related components for evaporative emissions:
   - Fuel tank
   - Fuel cap
   - Fuel line
   - Fuel line fittings
   - Clamps*
   - Pressure relief valves*
   - Control valves*
   - Control solenoids*
   - Electronic controls*
   - Vacuum control diaphragms*
   - Control cables*
   - Control linkages*
   - Purge valves
   - Vapor hoses
   - Liquid/vapor separator
   - Carbon canister
   - Canister mounting brackets
   - Carburetor purge port connector
4. Emission-related components also include any other part whose only purpose is to reduce emissions or whose failure will increase emissions without significantly degrading engine/equipment performance.

*As related to the evaporative emission control system

Limited Applicability

As a certifying manufacturer, BRP may deny emission-related warranty claims for failures that have been caused by the owner's or operator's improper maintenance or use, by accidents for which the manufacturer has no responsibility, or by acts of God. For example, an emission-related warranty claim need not be honored for failures that have been directly caused by the operator's abuse of the engine/equipment or the operator's use of the engine/equipment in a manner for which it was not designed and are not attributable to the manufacturer in any way.

* In the USA, products are distributed and serviced by BRP US Inc.

BRP INTERNATIONAL LIMITED WARRANTY: 2016 CAN-AM® SSV

1) SCOPE OF THE LIMITED WARRANTY

Bombardier Recreational Products Inc. (“BRP”)* warrants its 2016 Can-Am SSV sold by Can-Am SSV distributors or dealers authorized by BRP to distribute Can-Am SSVs ("Can-Am SSV Distributor/Dealer") outside of the fifty United States, Canada, member states of the European Economic Area (which is comprised of the states of the European Union plus Norway, Iceland and Liechtenstein) (“EEA”), member states of the Commonwealth of the Independent States (including Ukraine and Turkmenistan) (“CIS”) and Turkey, from defects in material or workmanship for the period and under the conditions described below.

All genuine Can-Am SSV parts and accessories, installed by an authorized Can-Am SSV Distributor/Dealer at the time of delivery of the 2016 Can-Am SSV, carry the same warranty as that of the Can-Am SSV.

This limited warranty will become null and void if: (1) The SSV was used for racing or any other competitive activity, at any point, even by a previous owner; or (2) the SSV has been altered or modified in such a way so as to adversely affect its operation, performance or durability, or has been altered or modified to change its intended use.

2) LIMITATIONS OF LIABILITY

TO THE EXTENT PERMITTED BY LAW, THIS WARRANTY IS EXPRESSLY GIVEN AND ACCEPTED IN LIEU OF ANY AND ALL OTHER WARRANTIES, EXPRESSED OR IMPLIED, INCLUDING WITHOUT LIMITATION ANY WARRANTY OF MERCHANTABILITY OR FITNESS FOR A PARTICULAR PURPOSE. TO THE EXTENT THAT THEY CANNOT BE DISCLAIMED, THE IMPLIED WARRANTIES ARE LIMITED IN DURATION TO THE LIFE OF THE EXPRESS WARRANTY. INCIDENTAL AND CONSEQUENTIAL DAMAGES ARE EXCLUDED FROM COVERAGE UNDER THIS WARRANTY. SOME JURISDICTIONS DO NOT ALLOW FOR THE DISCLAIMERS, LIMITATIONS AND EXCLUSIONS IDENTIFIED ABOVE, AS A RESULT, THEY MAY NOT APPLY TO YOU. THIS WARRANTY GIVES YOU SPECIFIC RIGHTS, AND YOU MAY ALSO HAVE OTHER LEGAL RIGHTS WHICH MAY VARY FROM COUNTRY TO COUNTRY. (FOR PRODUCTS PURCHASED IN AUSTRALIA SEE CLAUSE 4 BELOW).

Neither the Can-Am SSV Distributor/Dealer nor any other person has been authorized to make any affirmation, representation or warranty regarding the product, other than those contained in this limited warranty, and if made, shall not be enforceable against BRP.

BRP reserves the right to modify this warranty at any time, being understood that such modification will not alter the warranty conditions applicable to the products sold while this warranty is in effect.

3) EXCLUSIONS ARE NOT WARRANTED

The following are not warranted under this limited warranty under any circumstances:

- Normal wear and tear;
- Routine maintenance items, tune ups, adjustments (parts and labor);
- Damage caused by negligence or failure to provide proper maintenance and/or storage, as described in the Operator's Guide;

– Damage resulting from removal of parts, improper repairs, service, maintenance, modifications or use of parts not manufactured or approved by BRP or resulting from repairs done by a person that is not an authorized servicing Can-Am SSV Distributor/Dealer;
– Damage caused by abuse, abnormal use, neglect or operation of the product in a manner inconsistent with the recommended operation described in the Operator's Guide;
– Damage resulting from accident, submersion, fire, theft, vandalism or any act of God;
– Operation with fuels, oils or lubricants which are not suitable for use with the product (see the Operator's Guide);
– Damage resulting from rust, corrosion or exposure to the elements;
– Damage resulting from water or snow ingestion;
– Incidental or consequential damages, or damages of any kind including without limitation towing, transportation expenses, storage, telephone, rental, taxi, inconvenience, insurance coverage, loan payments, loss of time, loss of income or time missed for downtime experience due to service work.

4) WARRANTY COVERAGE PERIOD

This warranty will be in effect from (1) the date of delivery to the first retail consumer or (2) the date the product is first put into use, whichever occurs first and for a period of:

– SIX (6) CONSECUTIVE MONTHS for private use or commercial use.

The repair or replacement of parts or the performance of service under this warranty does not extend the life of this warranty beyond its original expiration date.

FOR PRODUCTS SOLD IN AUSTRALIA ONLY

Nothing in these Warranty terms and conditions should be taken to exclude, restrict or modify the application of any condition, warranty, guarantee, right or remedy conferred or implied under the Competition and Consumer Act 2010 (Cth), including the Australian Consumer Law or any other law, where to do so would contravene that law, or cause any part of these terms and conditions to be void. The benefits given to you under this limited warranty hereto are in addition to other rights and remedies that you have under Australian law.

Our goods come with guarantees that cannot be excluded under the Australian Consumer Law. You are entitled to a replacement or refund for a major failure and for compensation for any other reasonably foreseeable loss or damage. You are also entitled to have the goods repaired or replaced if the goods fail to be of acceptable quality and the failure does not amount to a major failure.

5) CONDITIONS TO HAVE WARRANTY COVERAGE

This warranty coverage is available **only** if **each** of the following conditions has been fulfilled:

– The 2016 Can-Am SSV must be purchased as new and unused by its first owner from a Can-Am SSV Distributor/Dealer authorized to distribute Can-Am SSVs in the country in which the sale occurred;
– The BRP specified pre-delivery inspection process must be completed and documented;

– The product must have undergone proper registration by an authorized Can-Am SSV Distributor/Dealer;
– The 2016 Can-Am SSV must be purchased in the country or union of countries in which the purchaser resides; and
– Routine maintenance outlined in the Operator's Guide must be timely performed in order to maintain warranty coverage. BRP reserves the right to make warranty coverage contingent upon proof of proper maintenance.

BRP will not honor this limited warranty to any private use owner or commercial use owner if one of the preceding conditions has not been met. Such limitations are necessary in order to allow BRP to preserve both the safety of its products, and also that of its consumers and the general public.

6) WHAT TO DO TO OBTAIN WARRANTY COVERAGE UNDER THIS WARRANTY

The customer must cease using the SSV upon the appearance of an anomaly. The customer must notify a servicing Can-Am SSV Distributor/Dealer within two (2) days of the appearance of a defect, and provide it with reasonable access to the product and reasonable opportunity to repair it. The customer must also present to the authorized Can-Am SSV Distributor/Dealer proof of purchase of the product and must sign the repair/work order prior to starting the repair in order to validate the warranty repair. All parts replaced under this limited warranty become the property of BRP.

Note that the notification period is subject to the applicable national or local legislation in customer's country.

7) WHAT BRP WILL DO

To the extent permitted by law, BRP's obligations under this warranty are limited to, at its sole discretion, repairing parts found defective under normal use, maintenance and service; or replacing such parts with new genuine Can-Am SSV parts without charge for parts and labour, at any authorized Can-Am SSV Distributor/Dealer during the warranty coverage period under the conditions described herein. BRP's responsibility is limited to making the required repairs or replacements of parts. No claim of breach of warranty shall be cause for cancellation or rescission of the sale of the Can-Am SSV to the owner. You may have other legal rights which may vary from country to country.

In the event that service is required outside of the country of original sale, the owner will bear responsibility for any additional charges due to local practices and conditions, such as, but not limited to, freight, insurance, taxes, license fees, import duties, and any and all other financial charges, including those levied by governments, states, territories and their respective agencies.

BRP reserves the right to improve or modify products from time to time without assuming any obligation to modify products previously manufactured.

8) TRANSFER

If the ownership of a product is transferred during the warranty coverage period, this limited warranty, subject to its terms and conditions, shall also be transferred and be valid for the remaining coverage period provided BRP or an authorized Can-Am SSV Distributor/Dealer receives a proof that the former owner agreed to the transfer of ownership, in addition to the coordinates of the new owner.

9) CONSUMER ASSISTANCE

1. In the event of a controversy or a dispute in connection with this limited warranty, BRP suggests that you try to resolve the issue at the Can-Am SSV Distributor/Dealer level. We recommend discussing the issue with the authorized Can-Am SSV Distributor/Dealer's service manager or owner.
2. If further assistance is required, the Can-Am SSV Distributor/Dealer service department should be contacted in order to resolve the matter.
3. If the matter still remains unresolved then contact BRP by writing to us at the address listed below.

For countries within Middle East and Africa, please contact our European office:

BRP EUROPE N.V.
Customer Assistance Center
Skaldenstraat 125
9042 Gent
Belgium
Tel.: + 32-9-218-26-00

For all other countries, please contact your local Can-Am SSV Distributor/Dealer (visit our website at www.brp.com for contact information), or contact our North America office at:

BOMBARDIER RECREATIONAL PRODUCTS INC.
Customer Assistance Center
75, J.-A. Bombardier Street
Sherbrooke, Québec J1L 1W3

Canada
Tel.: +1 819 566-3366

* For the territory covered by this limited warranty, products are distributed and serviced by Bombardier Recreational Products Inc. or its affiliates.
© 2015 Bombardier Recreational Products Inc. All rights reserved.
® Trademark of Bombardier Recreational Products Inc. or its affiliates.

BRP LIMITED WARRANTY FOR THE EUROPEAN ECONOMIC AREA, THE COMMONWEALTH OF THE INDEPENDANT STATES AND TURKEY: 2016 CAN-AM® SSV

1) SCOPE OF THE LIMITED WARRANTY

Bombardier Recreational Products Inc. ("BRP")* warrants its 2016 Can-Am SSVs sold by Can-Am SSV distributors or dealers authorized by BRP to distribute Can-Am SSVs ("Can-Am SSV Distributor/Dealer").in member states of the European Economic Area (which is comprised of the member states of the European Union plus Norway, Iceland and Liechtenstein) ("EEA"), in member states of the Commonwealth of the Independent States (including Ukraine and Turkmenistan) ("CIS") and Turkey from defects in material or workmanship for the period and under the conditions described below.

All genuine Can-Am SSV parts and accessories, installed by an authorized Can-Am SSV Distributor/Dealer at the time of delivery of the 2016 Can-Am SSV, carry the same warranty as that of the SSV.

This limited warranty will become null and void if: (1) The SSV was used for racing or any other competitive activity, at any point, even by a previous owner; or (2) the SSV has been altered or modified in such a way so as to adversely affect its operation, performance or durability, or has been altered or modified to change its intended use.

2) LIMITATIONS OF LIABILITY

TO THE EXTENT PERMITTED BY LAW, THIS WARRANTY IS EXPRESSLY GIVEN AND ACCEPTED IN LIEU OF ANY AND ALL OTHER WARRANTIES, EXPRESSED OR IMPLIED, INCLUDING WITHOUT LIMITATION ANY WARRANTY OF MERCHANTABILITY OR FITNESS FOR A PARTICULAR PURPOSE. TO THE EXTENT THAT THEY CANNOT BE DISCLAIMED, THE IMPLIED WARRANTIES ARE LIMITED IN DURATION TO THE LIFE OF THE EXPRESS WARRANTY. INCIDENTAL AND CONSEQUENTIAL DAMAGES ARE EXCLUDED FROM COVERAGE UNDER THIS WARRANTY. SOME JURISDICTIONS DO NOT ALLOW FOR THE DISCLAIMERS, LIMITATIONS AND EXCLUSIONS IDENTIFIED ABOVE, AS A RESULT, THEY MAY NOT APPLY TO YOU. THIS WARRANTY GIVES YOU SPECIFIC RIGHTS, AND YOU MAY ALSO HAVE OTHER LEGAL RIGHTS WHICH MAY VARY FROM COUNTRY TO COUNTRY.

Neither the Can-Am SSV Distributor/Dealer nor any other person has been authorized to make any affirmation, representation or warranty regarding the product, other than those contained in this limited warranty, and if made, shall not be enforceable against BRP.

BRP reserves the right to modify this warranty at any time, being understood that such modification will not alter the warranty conditions applicable to the products sold while this warranty is in effect.

3) EXCLUSIONS – ARE NOT WARRANTED

The following are not warranted under this limited warranty under any circumstances:

- Normal wear and tear;
- Routine maintenance items, tune ups, adjustments (parts and labor);

– Damage caused by negligence or failure to provide proper maintenance and/or storage, as described in the Operator's Guide;
– Damage resulting from removal of parts, improper repairs, service, maintenance, modifications or use of parts not manufactured or approved by BRP or resulting from repairs done by a person that is not an authorized servicing Can-Am SSV Distributor/Dealer;
– Damage caused by abuse, abnormal use, neglect or operation of the product in a manner inconsistent with the recommended operation described in the Operator's Guide;
– Damage resulting from accident, submersion, fire, snow or water ingestion, theft, vandalism or any act of God;
– Operation with fuels, oils or lubricants which are not suitable for use with the product (see the Operator's Guide);
– Damage resulting from rust, corrosion or exposure to the elements;
– Incidental or consequential damages, or damages of any kind including without limitation towing, transportation expenses, storage, telephone, rental, taxi, inconvenience, insurance coverage, loan payments, loss of time, loss of income or time missed for downtime experience due to service work.

4) WARRANTY COVERAGE PERIOD

This warranty will be in effect from (1) the date of delivery to the first retail consumer or (2) the date the product is first put into use, whichever occurs first and for a period of:
– TWENTY-FOUR (24) CONSECUTIVE MONTHS for private use.
– SIX (6) CONSECUTIVE MONTHS for commercial use or rental use.

The product is used commercially when it is used in connection with any work or employment that generates income during any part of the warranty period. The product is also used commercially when, at any point during the warranty period, it is licensed for commercial use.

The repair or replacement of parts or the performance of service under this warranty does not extend the life of this warranty beyond its original expiration date.

Note that the duration and any other modalities of the warranty coverage are subject to the applicable national or local legislation in your country.

5) CONDITIONS TO HAVE WARRANTY COVERAGE

This warranty coverage is available **only** if **each** of the following conditions has been fulfilled:
– The 2016 Can-Am SSV must be purchased as new and unused by its first owner from a Can-Am SSV Distributor/Dealer authorized to distribute Can-Am SSVs in the country in which the sale occurred;
– The BRP specified pre-delivery inspection process must be completed and documented;
– The product must have undergone proper registration by an authorized Can-Am SSV Distributor/Dealer;

– The 2016 Can-Am SSV must be purchased in the country or union of countries in which the purchaser resides; and
– Routine maintenance outlined in the Operator's Guide must be timely performed in order to maintain warranty coverage. BRP reserves the right to make warranty coverage contingent upon proof of proper maintenance.

BRP will not honor this limited warranty to any private use owner or commercial use owner if one of the preceding conditions has not been met. Such limitations are necessary in order to allow BRP to preserve both the safety of its products, and also that of its consumers and the general public.

6) WHAT TO DO TO OBTAIN WARRANTY COVERAGE UNDER THIS WARRANTY

The customer must cease using the SSV upon the appearance of an anomaly. The customer must notify a servicing Can-Am SSV Distributor/Dealer within two (2) months of the appearance of a defect and provide it with reasonable access to the product and reasonable opportunity to repair it. The customer must also present to the authorized Can-Am SSV Distributor/Dealer, proof of purchase of the product and must sign the repair/work order prior to starting the repair in order to validate the warranty repair. All parts replaced under this limited warranty become the property of BRP.

Note that the notification period is subject to the applicable national or local legislation in your country.

7) WHAT BRP WILL DO

To the extent permitted by law, BRP's obligations under this warranty are limited to, at its sole discretion, repairing parts found defective under normal use, maintenance and service, or replacing such parts with new genuine Can-Am SSV parts without charge for parts and labor, at any authorized Can-Am SSV Distributor/Dealer during the warranty coverage period under the conditions described herein. BRP's responsibility is limited to making the required repairs or replacements of parts. No claim of breach of warranty shall be cause for cancellation or rescission of the sale of the Can-Am SSV to the owner. You may have other legal rights which may vary from country to country.

In the event that service is required outside of the EEA, the owner will bear responsibility for any additional charges due to local practices and conditions, such as, but not limited to, freight, insurance, taxes, license fees, import duties, and any and all other financial charges, including those levied by governments, states, territories and their respective agencies.

BRP reserves the right to improve or modify products from time to time without assuming any obligation to modify products previously manufactured.

8) TRANSFER

If the ownership of a product is transferred during the warranty coverage period, this warranty shall also be transferred and be valid for the remaining coverage period provided BRP or an authorized Can-Am SSV Distributor/Dealer receives a proof that the former owner agreed to the transfer of ownership, in addition to the co-ordinates of the new owner.

9) CONSUMER ASSISTANCE

1. In the event of a controversy or a dispute in connection with this limited warranty, BRP suggests that you try to resolve the issue at the Can-Am SSV Distributor/Dealer level. We recommend discussing the issue with the authorized Can-Am SSV Distributor/Dealer's service manager or owner.
2. If further assistance is required, the Can-Am SSV Distributor/Dealer service department should be contacted in order to resolve the matter.
3. If the matter still remains unresolved then contact BRP at the address listed below.

For countries within EEA, CIS or Turkey, except Scandinavian countries please contact our European office:

BRP EUROPE N.V.
Customer Assistance Center
Skaldenstraat 125
9042 Gent
Belgium
Tel.: + 32-9-218-26-00

For Scandinavian countries, please contact our Finland office:

BRP FINLAND OY
Service Department
Isoaavantie 7
FIN-96320 Rovaniemi
Finland
Tel.: + 358 16 3208 111

You can find your Can-Am Distributor/Dealer's coordinates on www.brp.com.

* In the EEA, products are distributed and serviced by BRP European Distribution S.A. and other affiliates or subsidiaries of BRP.

© 2015 Bombardier Recreational Products Inc. All rights reserved.
® Trademark of Bombardier Recreational Products Inc. or its affiliated.

ADDITIONAL TERMS AND CONDITIONS FOR FRANCE ONLY

The following terms and conditions are applicable to products sold in France only:

The seller shall deliver goods that are complying with the contract and shall be responsible for defects existing upon delivery. The seller shall also be responsible for defects resulting from packaging, assembling instructions or the installation when it is its responsibility per the contract or if accomplished under its responsibility. To be compliant with the contract, the good shall:

1. Be fit for normal use for goods similar thereto and, if applicable:
   - Correspond to the description provided by the seller and have the qualities presented to the buyer though sample or model;
   - Have the qualities that a buyer may legitimately expect considering the public declarations of the seller, the manufacturer of its representative, including in advertising or labeling; or
2. Have the characteristics mutually agreed upon as between the parties or be fit for the specific use intended by the buyer and brought to the attention of the seller and which accepted.

The action for failure to comply is prescribed after two years after delivery of the goods. The seller is responsible for the warranty for hidden defects of the goods sold if such hidden defects are rendering the good unfit for the intended use, or if they diminish its use in such a way that the buyer would not have acquired the good or would have given a lesser price, had he known. The action for such hidden defects shall be taken by the buyer within 2 years of the discovery of the defect.

This page is intentionally blank

CUSTOMER INFORMATION

PRIVACY INFORMATION

BRP wishes to inform you that your coordinates will be used for safety and warranty related purposes. Furthermore, BRP and its affiliates may use its customer list to distribute marketing and promotional information about BRP and related products.

To exercise your right to consult or correct your data, or to be removed from the addressee-list for direct marketing, please contact BRP.

BY E-MAIL: privacyofficer@brp.com

BY MAIL: BRP
Senior Legal Counsel-Privacy Officer
726 St-Joseph
Valcourt, Quebec
Canada,
J0E 2L0

CHANGE OF ADDRESS/OWNERSHIP

If your address has changed or if you are the new owner of the vehicle, be sure to notify BRP by either:

– Mailing one of the following card below;
– North America Only: calling at 1-888-272-9222;
– Notifying an authorized Can-Am dealer.

In case of change of ownership, please join a proof that the former owner agreed to the transfer.

Notifying BRP, even after the expiration of the limited warranty, is very important as it enables BRP to reach the vehicle owner if necessary, like when safety recalls are initiated. It is the owner's responsibility to notify BRP.

STOLEN UNITS: If your personal vehicle is stolen, you should notify BRP or an authorized Can-Am dealer. We will ask you to provide your name, address, phone number, the vehicle identification number and the date it was stolen.

In North America

BOMBARDIER RECREATIONAL
PRODUCTS INC.
Warranty Department
75 J.-A. Bombardier Street
Sherbrooke, QC J1L 1W3
Canada

In Other Countries in the World

BRP EUROPEAN DISTRIBUTION
Avenue d'Ouchy 4-6
1006 Lausanne
Switzerland

In Scandinavian Countries

BRP FINLAND OY
Service Department
Isoaavantie 7
Fin-96320 Rovaniemi
Finland
Tel.: + 358 16 3208 111

This page is intentionally blank

CHANGE OF ADDRESS ☐ CHANGE OF OWNERSHIP ☐

VEHICLE IDENTIFICATION NUMBER

Model Number Vehicle Identification Number (V.I.N.)

OLD ADDRESS OR PREVIOUS OWNER:

NAME

NO. STREET APT

CITY STATE/PROVINCE ZIP/POSTAL CODE

COUNTRY TELEPHONE

NEW ADDRESS OR NEW OWNER:

NAME

NO. STREET APT

CITY STATE/PROVINCE ZIP/POSTAL CODE

COUNTRY TELEPHONE

V00A2F

E-MAIL ADDRESS

CHANGE OF ADDRESS ☐ CHANGE OF OWNERSHIP ☐

VEHICLE IDENTIFICATION NUMBER

Model Number Vehicle Identification Number (V.I.N.)

OLD ADDRESS OR PREVIOUS OWNER:

NAME

NO. STREET APT

CITY STATE/PROVINCE ZIP/POSTAL CODE

COUNTRY TELEPHONE

NEW ADDRESS OR NEW OWNER:

NAME

NO. STREET APT

CITY STATE/PROVINCE ZIP/POSTAL CODE

COUNTRY TELEPHONE

V00A2F

E-MAIL ADDRESS

⚠ WARNING

To reduce risk of serious injury or death, read this Operator's Guide and safety labels, watch the safety video and:

Be prepared
- Fasten seat belts and nets.
- Wear an approved helmet and protective gear.
- Each rider must be able to sit with back against seat, foot flat on the floor or on footrest, and hands on steering wheel or handholds. Stay completely inside the vehicle.

Drive responsibly
- Avoid loss of control and rollovers.
- Avoid abrupt maneuvers, sideways sliding, skidding or fishtailing and never do donuts.
- Avoid hard acceleration when turning, even from a stop.
- Slow down before entering a turn.
- Plan for hills, rough terrain, ruts and other changes in traction and terrain.
- Avoid paved surfaces.
- Avoid side hilling (riding across slopes).

Be Qualified and Responsible
- Do not allow careless or reckless driving.
- Driver must be at least 16 years old with a valid driver's license.
- Do not operate after using drugs or alcohol.
- Do not allow operation on public roads (unless designated for off-highway vehicle access) – collisions with cars and trucks can occur.
- Do not exceed vehicle seating capacity.

219 001 643
OPERATOR'S GUIDE COMMANDER Series / ENGLISH
GUIDE DU CONDUCTEUR COMMANDER Series / ANGLAIS

FAIT AU / MADE IN CANADA U/M:P.C.

®™ AND THE BRP LOGO ARE TRADEMARKS OF BOMBARDIER RECREATIONAL PRODUCTS INC. OR ITS AFFILIATES.
©2015 BOMBARDIER RECREATIONAL PRODUCTS INC. ALL RIGHTS RESERVED. PRINTED IN CANADA.