can-am BRP

OPERATOR'S GUIDE

Includes Safety, Use and Maintenance Information

2026

⚠ WARNING

Read this operator's guide thoroughly. It contains important safety information.

Minimum recommended operator age: 16 or older with a valid driver's license. Keep this operator's guide with the vehicle at all times.

The removal or modification of evaporative emission-related parts on this OHRV is illegal.

Violators may be subject to civil and/or criminal penalties under California and federal law.

DEFENDER HD11 SERIES (EXCLUDING EUROPEAN UNION AND UNITED KINGDOM) / TRAXTER HD11 SERIES

Original Instructions

⚠ WARNING

YOUR VEHICLE CAN BE HAZARDOUS TO OPERATE. A collision or rollover can occur quickly, if you fail to take proper precautions, even during routine maneuvers such as turning and driving on hills or over obstacles.

For your safety, understand and follow all the warnings contained in this operator's guide and on the labels on your vehicle. Failure to follow these warnings can result in SEVERE INJURY OR DEATH.

Keep this operator's guide with the vehicle at all times.

CALIFORNIA PROPOSITION 65 WARNING

⚠ WARNING

Operating, servicing and maintaining a passenger vehicle can expose you to chemicals including engine exhaust, carbon monoxide, phthalates, and lead, which are known to the State of California to cause cancer and birth defects or other reproductive harm. To minimize exposure, avoid breathing exhaust, do not idle the engine except as necessary, service your vehicle in a well-ventilated area and wear gloves or wash your hands frequently when servicing your vehicle. For more information go to

www.p65warnings.ca.gov/products/passenger-vehicle.

⚠ WARNING

Disregarding any of the safety precautions and instructions contained in the Operators's Guide, Safety Video and on product safety labels could cause injury including the possibility of death.

Deutsch	Dieses Handbuch ist möglicherweise in Ihrer Landessprache verfügbar. Bitte wenden Sie sich an Ihren Händler oder besuchen Sie: **www.operatorsguides.brp.com**
English	This guide may be available in your language. Check with your dealer or go to: **www.operatorsguides.brp.com**
Español	Es posible que este manual esté disponible en su idioma. Consulte a su distribuidor o visite: **www.operatorsguides.brp.com**
Français	Ce guide peut être disponible dans votre langue. Vérifier avec votre concessionnaire ou aller à: **www.operatorsguides.brp.com**
Italiano	Questa guida potrebbe essere disponibile nella propria lingua. Contattare il concessionario o consultare: **www.operatorsguides.brp.com**
中文	本手册可能有您的语种的翻译版本。请向经销商问询，或者登录 www.operatorsguides.brp.com 查询。
日本語	このガイドは、言語によって翻訳版が用意されています。. ディーラーに問い合わせるか、次のアドレスでご確認ください： **www.operatorsguides.brp.com**
Nederlands	Deze handleiding kan beschikbaar zijn in uw taal. Vraag het aan uw dealer of ga naar: **www.operatorsguides.brp.com**
Norsk	Denne boken kan finnes tilgjengelig på ditt eget språk. Kontakt din forhandler eller gå til: **www.operatorsguides.brp.com**
Português	Este manual pode estar disponível em seu idioma. Fale com sua concessionária ou visite o site: **www.operatorsguides.brp.com**
Русский	Воспользуйтесь руководством на вашем языке. Узнайте о его наличии у дилера или на странице по адресу www.operatorsguides.brp.com
Suomi	Käyttöohjekirja voi olla saatavissa omalla kielelläsi. Tarkista jälleenmyyjältä tai käy osoitteessa: **www.operatorsguides.brp.com**
Svenska	Denna bok kan finnas tillgänglig på ditt språk. Kontakta din återförsäljare eller gå till: **www.operatorsguides.brp.com**

Covered Models
Defender XT
Defender XT CAB
Defender XU
Traxter XT

®™ and the BRP logo are trademarks of Bombardier Recreational Products Inc. or its affiliates.

©2025 Bombardier Recreational Products Inc. All rights reserved.

Printed in Canada

This is a non-exhaustive list of trademarks that are the property of Bombardier Recreational Products Inc. or its affiliates.

Trademarks may not be registered in every jurisdictions.

Can-Am® **D.E.S.S.™** **DPS™**

ROTAX® **XPS®**

In Canada, products are distributed and serviced by Bombardier Recreational Products Inc. (BRP).

In the USA, products are distributed and serviced by BRP US Inc.

In the European Economic Area (which is comprised of the member states of the European Union plus the United Kingdom, Norway, Iceland and Liechtenstein), the Commonwealth of the Independent States (including Ukraine and Turkmenistan) and Turkey, products are distributed and serviced by BRP European Distribution S.A. and other affiliates or subsidiaries of BRP.

For all other countries, products are distributed and serviced by Bombardier Recreational Products Inc. (BRP) or its affiliates.

TABLE OF CONTENTS

GENERAL INFORMATION 1
SAFETY INFORMATION 2
VEHICLE INFORMATION 3
MAINTENANCE 4
TECHNICAL INFORMATION 5
TECHNICAL SPECIFICATIONS 6
TROUBLESHOOTING 7
WARRANTY 8
CUSTOMER INFORMATION 9

1 GENERAL INFORMATION - TABLE OF CONTENTS

GENERAL INFORMATION 1-2
Know Before you Go 1-2
Safety Messages 1-2
About this Operator's Guide 1-3
Be A Responsible Rider 1-3
Respect of the Environment 1-4

SAFE OPERATION - RESPONSIBILITIES 1-6
Owner - Be Responsible 1-6
Operator - Be Qualified and Responsible 1-6
Riding Carefully 1-8
Occupant Restraint System 1-8
Terrain Condition 1-9

GENERAL INFORMATION

Congratulations on your purchase of a new Can-Am® side-by-side vehicle. It's backed by the BRP limited warranty and a network of authorized Can-Am dealers ready to provide the parts, accessories or service you may require.

At delivery, you were informed of the warranty coverage and signed the Pre-delivery Check List to ensure your new vehicle was prepared to your entire satisfaction.

Your dealer is committed to your satisfaction. If you need more information, please ask your dealer.

Know Before you Go

To learn how to reduce the risk of accident for you or bystanders, read this Operator's Guide before you operate the vehicle.

Also, read all safety labels on your vehicle and watch the *Safety Video* located at:

https://can-am.brp.com/off road/safety

Or use the following QR code.

This vehicle is for off-road use only. It is mainly for general recreational use but it may also be used for utility purposes.

Failure to follow the warnings contained in this Operator's Guide can result in SERIOUS INJURY or DEATH.

Safety Messages

The types of safety messages, what they look like and how they are used in this guide are explained as follows:

The safety alert symbol ⚠ indicates a potential injury hazard.

⚠ WARNING
Indicates a potential hazard which, if not avoided, could result in serious injury or death.

⚠ CAUTION

Indicates a hazardous situation which, if not avoided, could result in minor or moderate injury.

NOTICE

Indicates an instruction which, if not followed, could result in severely damaged vehicle components or other property.

About this Operator's Guide

This Operator's Guide has been prepared to acquaint the owner/operator of a new vehicle with the various vehicle controls, maintenance and safe operating instructions. It is indispensable for the proper use of the product.

Keep this Operator's Guide in the vehicle as you can refer to it for things such as maintenance, troubleshooting and instructing others.

Note that this guide is available in several languages. In the event of any discrepancy, the English version shall prevail.

If you want to view and/or print an extra copy of your Operator's Guide, simply visit the following website:

- www.operatorsguides.brp.com

The information contained in this document is correct at the time of publication. BRP, however, maintains a policy of continuous improvement of its products without imposing upon itself any obligation to install them on products previously manufactured. Due to late changes, some differences between the manufactured product and the descriptions and/or specifications in this guide may occur. BRP reserves the right at any time to discontinue or change specifications, designs, features, models or equipment without incurring any obligation upon itself.

This Operator's Guide should remain with the vehicle when it is sold.

Be A Responsible Rider

At BRP, we believe there's an opportunity for everyone in the powersports and marine communities to come together and rethink how we approach safety, riding etiquette, and the environment. We believe that when we empower all riders to ride responsibly – to look out for each other and safeguard our trails and playgrounds – we inspire an industry to welcome newcomers, build a more caring community and generate positive experiences.

Whether you ride on trails, roads, water or snow, BRP is committed to driving positive change. That's why we're making the Responsible Rider program a key part of our Corporate Social Responsibility initiative through action, education and community empowerment.

To learn more about Responsible Rider, including tips and tricks on safety, riding etiquette and the environment, visit:

- canamoffroad.com/responsible-rider/

Respect of the Environment

The guidelines that we support are not designed to limit your fun, but to preserve the beautiful freedom that you can experience only with an off-road vehicle!

These guidelines will keep operators and passengers healthy, happy and able to introduce others to what they know and enjoy about their favorite pastime. So, the next time you hit the trails, we ask you to remember that you are paving the way for the future of our sport. Help us lead it down the right path! From all of us at BRP, thank you for doing your share.

There is nothing more exhilarating than off-road adventures. Venturing onto trails that cross wild areas is an exciting and healthy sport. However, as the number of people using these recreational parks increases, so does the potential for damage to the environment. Abuse of land, facilities and resources inevitably leads to restrictions and closures of both private and public land.

In essence, the greatest threat to our sport, is all around us. Which leaves us with one logical choice. We must always ride responsibly.

The vast majority respect the law and the environment. Each of us must set an example for those who are new to the sport, young and old alike.

It is in every one's best interest to tread lightly into our recreational areas. Because, in the long run, to protect the sport we must preserve the environment.

Recognizing the importance of this issue and the need for off-road riders to do their share in preserving areas that make it possible to enjoy our sport, BRP invite all off-road riders to remember that respecting the environment is not only critical to the future of our industry but to future generations.

You are a good ambassador for your sport when you follow the principles below.

Become informed. Obtain maps, regulations and other information from the Off-road clubs, the Forest Service or from other public land agencies. Learn the rules and follow them and that goes for speed limits, too!

Avoid running over young trees, shrubs, and grasses and don't cut wood. On flatlands or areas where trail riding is popular, it's important to ride only where authorized. Remember, there is a link between protecting your environment and your own safety.

Respect wildlife and be particularly sensitive of animals that are rearing young or suffering from food shortage. Stress can sap scarce energy reserves. Refrain from riding in areas where only animals are intended to tread!

Obey gate closures and regulatory signs and remember, light treaders don't litter!

Stay out of wilderness areas. They're closed to all vehicles. Know where the boundaries are.

Obtain permission to travel across private land. Respect the rights of landowners and other people's privacy. Remember, the technology has lowered the noise factor considerably, but you still shouldn't rev your engines where quiet “is the order of the day”.

Off-road riders know all too well the efforts that have been made throughout the sport's history to enjoy access to areas where people can ride safely and responsibly. This effort continues today, as strong as ever.

Respecting the areas where we ride... wherever they may be... is the principal way to ensure future enjoyment for all.

Take the opportunity to admire nature and all its wonders, is an experience cherished by off-road riders. Respect the nature and wildlife will help our sport to grow!

Finally, you don't have to leave big tracks or careen through a virgin forest to show you can ride. So whether you're driving a high performance BRP off-road vehicle or any other make or model, show you know what you're doing.

SAFE OPERATION - RESPONSIBILITIES

This is a high performance vehicle.

Operators must be responsible and use care to avoid rollovers, tipovers, collisions, and other accidents.

Even with vehicle safety features (such as protective structure, seat belts, side nets, doors) and protective gear (such as a helmet), there is always a risk of injury or death in these accidents.

To reduce the risk of serious injury or death, follow the rules in this section.

Owner - Be Responsible

Read this Operator's Guide and watch the *Safety Video*. Refer to the link at the beginning of the Operator's Guide.

Always inspect and confirm the safe operating condition of your vehicle prior to ride. Always follow the maintenance schedule described in this Operator's Guide.

Never allow anyone to operate your vehicle unless they are responsible and can be trusted with a high performance vehicle. Consider supervising new or young operators and setting rules and limits (e. g., whether they can carry passengers, what they may do with the vehicle, where they may ride, etc.) for anyone using your vehicle.

Select the appropriate D. E. S. S. key based on the operator's experience, vehicle use and environment.

Discuss the safety information with anyone who will be using the vehicle. Be sure that all operators and passengers meet the qualifications below and agree to follow the safety information. Help users become familiar with the vehicle.

We encourage you to have an Annual Safety Inspection of your vehicle. Please contact an authorized BRP dealer for further details. Though not required, it is recommended that an authorized BRP dealer performs the preseason preparation of your vehicle. Each visit to your authorized BRP dealer is a great opportunity for your dealer to verify if your vehicle is included in any safety campaign. We also urge you to visit your authorized BRP dealer in a timely manner if you become aware of any safety related campaigns.

See an authorized BRP dealer for available accessories you may require.

Operator - Be Qualified and Responsible

Read this Operator's Guide and watch the Safety Video, refer to the link at the beginning of the Operator's Guide.

Become completely familiar with the operational controls and the general operation of the vehicle.

Take a training course if available (contact an authorized Can-Am dealer to find out about training course availability as well as on the internet at https://rohva.org/).

Perform the practice exercises in PRACTICE EXERCISES, page 2-13 section. Practice driving in a suitable area free of hazards and feel the response of each control. Drive at low speeds. Higher speeds require greater experience, knowledge and suitable riding conditions.

Be at least 16 years of age.

Be tall enough to be properly seated: back against the backrest with the seat belt fastened, to hold the steering wheel with both hands and still be able to reach the full stroke of brake and accelerator pedals with the right foot and to firmly plant left foot on the footrest.

Have a proper driver's license in accordance with local laws.

Never use this vehicle with drugs or alcohol, or if tired or ill. These slow reaction time and impair judgment.

Carrying Passengers

Only carry a maximum of three (3) persons, the driver and up to two (2) passengers.

Operator and passengers must always wears appropriate protective clothing and apparel.

The passengers must be properly seated in the cockpit.

The passengers must be tall enough to always be properly seated: back against the backrest with seat belt fastened, holding the handhold, and feet firmly planted on the footrest and on the vehicle floor.

Instruct the passengers to read the vehicle’s safety labels.

Never carry passengers if you judge their ability or judgement insufficient to concentrate on the terrain conditions and adapt accordingly. More specifically for side-by-side vehicles, the passenger must also pay constant attention to the terrain ahead and be able to brace for bumps.

Riding Carefully

- This vehicle handles differently from other vehicles. A collision or rollover can occur quickly, during abrupt maneuvers such as doing sharp turns, acceleration or deceleration and driving on hills or over obstacles, if you fail to take proper precautions.
- Never operate at excessive speeds. Always go at a speed that is proper for the terrain, visibility, and operating conditions, and your experience.
- Never attempt jumps, side slides, donuts or any other stunts.
- Never attempt rapid acceleration or deceleration when performing a sharp turn. This may result in a roll over.
- Never attempt skidding or sliding. If vehicle starts to skid or slide, counter steer in the direction of skidding or sliding. On extremely slippery surfaces, such as ice, go slowly and be very cautious in order to reduce the chance of skidding out of control.
- Always be sure there are no obstacles or people behind the vehicle when you operate in reverse. Pay attention to blind spots. When it is safe to proceed in reverse, go slowly.
- Never exceed the stated load limits for this vehicle. Cargo must be properly secured. Reduce speed, allow for greater braking distance and follow other instructions in Moving loads and doing work, page 2-25.
- Always remember that this vehicle is heavy! Its pure weight alone may entrap you should it tip or rollover.

Occupant Restraint System

- All occupants must latch the doors or the side nets and wear the seat belts at all times when riding.
- Before riding, everyone aboard should know how to unbuckle their seat belt rapidly. Knowing how to properly detach your seat belt is a crucial skill that can save your life in an emergency situation. In the event of an accident or vehicle malfunction, being able to quickly release your seat belt can help you escape the vehicle and avoid potential hazards such as fire or sinking. Additionally, knowing to quickly release your seat belt can also help you assist others such as children or older persons.

Terrain Condition

- This vehicle is not designed to ride on paved surfaces; if you must shortly use the vehicle on such surfaces, avoid abrupt inputs to steering wheel, accelerator and brake pedals.
- Always go slowly and be extra careful when operating on unfamiliar terrain. Always be alert to changing terrain conditions when operating this vehicle. Take the time to learn how the vehicle performs in different environments.
- Never operate on excessively rough, slippery or loose terrain until you have learned and practiced the skills necessary to control this vehicle on such terrain. Always be especially cautious on these kinds of terrain.
- Never operate this vehicle on hills too steep for the vehicle or your abilities. Practice on small inclines.
- Always follow proper procedures for climbing or going down hills as described in RIDE SAFELY, page 2-15. Check the terrain carefully before you start up or down any hill. Never climb or descend hills with excessively slippery or loose surfaces. Never go over the top of any hill at high speed.
- Never attempt steep hills or side hilling when pulling a trailer.
- Always check for obstacles before operating in a new area. Always follow proper procedures when operating over obstacles as described in RIDE SAFELY, page 2-15.
- Never operate this vehicle in fast flowing water or in water deeper than specified in RIDE SAFELY, page 2-15.

  Remember that wet brakes may have reduced stopping ability. Test your brakes after leaving water. If necessary, apply them several times to let friction dry out the brakes.
- Always ensure to properly park the vehicle on the flattest terrain section available. Put shift lever in PARK, stop engine and remove key before leaving the vehicle.
- If parking on a slope is inevitable, Placing a large rock or similar object behind a wheel to block it from moving is recommended.
- Never assume that the vehicle will go everywhere safely. Sudden changes in terrain caused by holes, depressions, banks, softer or harder “ground” or other irregularities may cause the vehicle to topple or become unstable. To avoid this, slow down and always observe the terrain ahead. If the vehicle does begin to topple or rollover, the best advice is to immediately steer in the direction of the rollover! Never attempt to prevent a rollover with your arms or legs. You should keep your limbs inside the cage or ROPS (rollover protective structure).

NOTES

2 SAFETY INFORMATION - TABLE OF CONTENTS

GENERAL PRECAUTIONS 2-3
Avoid Carbon Monoxide Poisoning 2-3
Avoid Gasoline Fires and Other Hazards 2-3
Avoid Burns from Hot Parts 2-4
Accessories and Modifications 2-4

DRUGS AND ALCOHOL 2-6

PROTECTIVE GEAR 2-7
Helmets and Eye Protection 2-7
Other Riding Gear 2-8

REQUIRED EQUIPMENT 2-10

GET FAMILIAR WITH THE VEHICLE 2-11
Off-Road Operation 2-11
Steering 2-12
Braking 2-12
Vehicle Blind Spots 2-12

PRACTICE EXERCISES 2-13
Turning Exercises 2-13
U Turn Exercises 2-14
Braking Exercises 2-14
Reverse Exercises 2-14
Emergency Engine Stopping Exercise 2-14

RIDE SAFELY 2-15
Avoid Rollovers and Tipovers 2-15
Avoid Collisions 2-17
Off-Road Operation 2-17
General Driving Tips 2-18
Operating in Reverse 2-19
Crossing Roads 2-19
Riding on Paved Surfaces 2-19
Shallow Water Crossing 2-19
Riding on Snow or Ice 2-20
Riding on Sand 2-21
Riding on Gravel, Loose Stones or Other Slippery Surfaces 2-21
Crossing Obstacles 2-21
Hill Driving Conditions 2-22
Recreational, Group and Distance Riding 2-23
Environment 2-23

MOVING LOADS AND DOING WORK 2-25
Working with Your Vehicle 2-25
Carrying Loads 2-26
Hauling a Load 2-29
Pulling a Trailer 2-29

IMPORTANT ON-PRODUCT LABELS(CANADA/ UNITED STATES) 2-31

Safety Hang Tag. 2-31

Safety Labels 2-34

Molded Safety Pictogram 2-53

Compliance HangTag. 2-55

IMPORTANT ON-PRODUCT SAFETY PICTOGRAM 2-56

Safety Pictogram 2-56

Molded Safety Pictogram 2-79

PRE–RIDE INSPECTION 2-81

Pre-Ride Inspection Check List 2-82

REPORTING SAFETY DEFECTS 2-86

GENERAL PRECAUTIONS

Avoid Carbon Monoxide Poisoning

All engine exhaust contains carbon monoxide, a deadly gas. Breathing carbon monoxide can cause headaches, dizziness, drowsiness, nausea, confusion and eventually death.

Carbon monoxide is a colorless, odorless, tasteless gas that may be present even if you do not see or smell any engine exhaust. Deadly levels of carbon monoxide can collect rapidly, and you can quickly be overcome and unable to save yourself. Also, deadly levels of carbon monoxide can linger for hours or days in enclosed or poorly ventilated areas. If you experience any symptoms of carbon monoxide poisoning, leave the area immediately, get fresh air and seek medical treatment.

To prevent serious injury or death from carbon monoxide:

- Never run the vehicle in poorly ventilated or partially enclosed areas such as garages, carports or barns. Even if you try to ventilate engine exhaust with fans or open windows and doors, carbon monoxide can rapidly reach dangerous levels.
- Never run the vehicle outdoors where engine exhaust can be drawn into a building through openings such as windows and doors.

Avoid Gasoline Fires and Other Hazards

Gasoline is extremely flammable and highly explosive. Fuel vapors can spread and be ignited by a spark or flame many feet away from the engine. To reduce the risk of fire or explosion, follow these instructions:

- Use only an approved red gasoline container to store fuel.
- Use only the BRP LinQ container to transport fuel in the cargo box.
- The container must be firmly secured to the cargo box floor using the LinQ system. No other red gasoline containers sold on the market is recommended.
- Never carry gasoline container(s) or any dangerous liquids in the cargo box.
- Never fill the gasoline container in the vehicle cargo box or on the vehicle - an electrical static discharge may ignite the fuel.
- For refueling the vehicle, strictly adhere to instructions in Fuel - Vehicle Fueling Procedure, page 3-62.
- Never start or operate the engine if the fuel cap is not properly installed.

Gasoline is poisonous and can cause injury or death.

- Never siphon gasoline by mouth.
- If you swallow gasoline, get any in your eye(s), or inhale gasoline vapor, see a doctor immediately.
- If gasoline spills on you, wash with soap and water and change your clothes.

Avoid Burns from Hot Parts

Certain components like brake rotors and exhaust components become hot during operation. Avoid contact with those parts during and shortly after operation to avoid burn wounds.

Accessories and Modifications

Any modifications or addition of accessories approved by BRP may affect the handling of your vehicle. It is important to take the time to get familiar with the vehicle once modifications are made to understand how to adapt your driving behavior accordingly.

Avoid installing equipment not specifically approved by BRP for the vehicle and avoid unauthorized modifications. These modifications and equipment have not been tested by BRP and may create hazards. For example, they could:

- Create a loss of control and increase risk of crash.
- Cause overheating or short circuits increasing the risk of fire or burn injuries.
- Affect the protection features provided by the vehicle.
- Affect the behavior of the trailer when the vehicle is transported.
- Cause a risk of losing objects on the road when transported.

Your vehicle may also become illegal to ride.

See your authorized BRP dealer for available BRP accessories for your vehicle.

For safety reasons, some BRP accessories must be installed by a BRP dealer but if you decide to install the accessory by yourself, when not required to be done by the dealer, it is important to follow all the instructions carefully and, if applicable, understand all the information on how to use the product or for servicing.

If the accessory has been installed on your vehicle by another person than you, BRP strongly recommends you to read the corresponding instruction sheet as there may be more for information on how to use it safely or for the servicing.

The instruction sheets can be found at this address:

- https://instructions.brp.com

DRUGS AND ALCOHOL

Never ride after consuming alcohol or drugs.

Riding this vehicle requires the operator and passenger(s) to be sober, attentive and alert.

The use of drugs and alcohol, singly or in combination, decreases reaction time, impedes judgment, impairs vision, and inhibits your ability to safely ride.

PROTECTIVE GEAR

It is important that the operator and passenger always wears appropriate protective clothing and apparel, including:

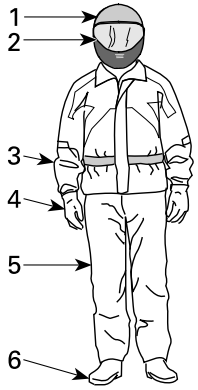

1. Approved helmet
2. Eye and face protection
3. Long sleeves shirt or jacket
4. Gloves
5. Long pants
6. Boots (over-the-ankle footwear)

Depending on conditions, anti-fogging goggles may be required.

Weather conditions should help you decide how to dress. To maximize comfort and avoid frostbites in winter, dress for the coldest weather expected. Thermal underwear next to the skin also provides good insulation.

Never wear any loose clothing that may get entangled in the vehicle or on tree branches and shrubs.

Helmets and Eye Protection

Helmets protect the head and brain from injury. Even with the vehicle's cage and doors or nets, objects can enter the cockpit and strike the head, or the head can strike the cage itself or objects outside the vehicle. Even the best helmet is no guarantee against injury, but statistics indicate that helmet use significantly reduces the risk of brain injury. So, be safe and always wear a helmet while riding.

Choosing a Helmet

Helmets should be manufactured to meet the appropriate standard in your state, province or country and should fit properly.

A helmet with face protection is a better choice as it protects also against frontal impacts. It can also protect against debris, stones, insects, the elements, etc.

An open-face helmet does not offer the same protection for the face and chin. If you wear an open-face helmet, you should use a snap-on face shield and/or a pair of goggles. Ordinary glasses or sunglasses are not sufficient eye protection for riders. They can shatter or fly off, and they allow wind and airborne objects to reach the eyes.

For winter riding conditions, a stocking type cap, balaclava and face mask should always be carried or worn.

Use tinted face shields or goggles in the daytime only; do not use them at night or in poor illumination. Do not use them if they impair your ability to discern color.

Other Riding Gear

Footwear

Always wear closed toe footwear. Sturdy over-the-ankle boots with non-slip soles offer more protection and allow you to plant your foot properly on footrest.

Avoid long shoelaces that can be tangled in the accelerator or brake pedals.

For winter riding conditions, rubber soled boots with either a nylon or leather uppers, with removable felt liners are best suited.

Avoid rubber boots. Rubber boots may get trapped behind or between pedals, impairing the proper operation of brake and accelerator pedals.

Gloves

Full-fingered gloves protect hands from the wind, sun, heat, cold and flying objects. Gloves that fit snugly will improve grip on the steering wheel and help reduce hand fatigue. Sturdy, reinforced motorcycle or ATV gloves help protect hands better in the event of an accident or a rollover. If gloves are too bulky, it may be difficult to operate the controls.

For winter riding conditions, hands should be protected by a pair of snowmobile gloves which have sufficient insulation and allow use of thumbs and fingers for operation of controls.

Jackets, Pants and Riding Suits

Wear a jacket or a long sleeved shirt and long pants, or a full riding suit. Quality ATV-type protective gear will provide comfort, and it can help you avoid being distracted by adverse environmental elements. In case of a crash, good quality protective gear made of sturdy material may prevent or reduce injury.

In cool-weather riding, protect yourself against hypothermia. Hypothermia, a condition of low body temperature, can cause loss of concentration, slowed reactions and loss of smooth, precise muscle movement. In cool conditions, proper protective gear like a windproof jacket and insulated layers of clothing are essential. Even while riding at moderate temperatures, you can feel very cold due to the wind.

Protective gear that is appropriate for cold-weather riding may be too hot when stopped. Dress in layers so that clothing can be removed as desired. Topping the protective gear with a windproof outer layer can prevent cold air from reaching the skin.

Rain Gear

If you must ride in wet weather, a rain suit or a waterproof riding suit is recommended. On long rides, it is a good idea to carry rain gear. A dry rider will be much more comfortable and alert.

Hearing Protection

Long-term exposure to wind and engine noise when riding can cause permanent hearing loss. Properly worn hearing protective devices such as earplugs can help prevent hearing loss. Check local laws before using any hearing protective devices.

REQUIRED EQUIPMENT

As the owner of an off-road vehicle, you are responsible for ensuring that all required safety equipment is aboard. Check your local regulations about requirements.

This could include:

- First aid kit
- Sling: to help a defective or stuck vehicle
- Tool kit
- Phone in a watertight compartment designed for this application
- Current local map.

For a long ride, you should also include the following:

- Snack
- Flashlight.

GET FAMILIAR WITH THE VEHICLE

This vehicle may exceed the performance of other vehicles you may have ridden. Take time to familiarize yourself with your new vehicle.

Inexperienced operators may overlook risks and be surprised by vehicle's specific behavior and terrain conditions. Ride slowly. Excessive speed and reckless driving can kill.

Make sure you read and understand the content of this operator's guide to become completely familiar with the controls and operation of this vehicle before embarking on your first trip or taking on a passenger(s).

Take time to practice driving solo in a suitable traffic-free area to become accustomed to the feel and response of each control.

It is very important to inform any operator, regardless of his experience, of the handling characteristics of this vehicle. The configuration, such as vehicle height, width, suspension type, tires type, and type vary from a model to another. The vehicle handling is greatly influenced by these characteristics.

Off-Road Operation

The very nature of off-road operation is dangerous. Any terrain, which has not been specially prepared to carry vehicles, presents an inherent danger where terrain substance, shape and steepness are unpredictable. The terrain itself presents a continual element of danger, which must be knowingly accepted by anyone venturing over it.

An operator who takes a vehicle off-road should always exercise the utmost care in selecting the safest path and keeping close watch on the terrain ahead of him. The vehicle should never be operated by anyone who is not completely familiar with the driving instructions applicable to the vehicle, nor should it be operated on steep or treacherous terrain.

The traction of the tires will vary depending on the surface conditions and the tread pattern.

The traction may be reduced on many surfaces (rock, sand, mud, snow, ice, etc.). Reduce your speed and allow more space to turn.

⚠ WARNING
Never stand behind or near a rotating tire. Debris could be projected causing severe injuries.

Steering

The front wheels are steered by the steering wheel.

Steering behavior will vary depending of the grip of the tires on the ground.

The Dynamic Power Steering (DPS) to reduce the effort to turn the steering wheel.

Riding with passenger(s) or when carrying loads will affect the steering control and vehicle handling. Pay attention and reduce the speed.

Braking

Braking performances may vary suddenly under certain conditions.

Always remember that the vehicle braking distance may be affected when riding with passenger(s) and when loaded with cargo at the rear.

Never jam the brakes. Be sure to use restraint in braking to keep from blocking the wheels in order to avoid surprises that could lead to a loss of control.

Vehicle Blind Spots

A blind spot is an area outside the driver's field of vision that cannot be seen in the rear-view mirror or, through the front and side openings.

In general, the taller and longer the vehicle is, the bigger the blind spots are.

For this reason, it is important to familiarize yourself with the blind spots of the vehicle created by its design, especially if it is a new vehicle.

The blind spots are all around the vehicles. The blind spots are located in front, at the rear and on the sides of the vehicle.

Be mindful about persons around the vehicle, other vehicles or nearby objects when operating the vehicle in reverse.

Pay attention to the vehicle blind spots when climbing or backing off from the platform, trailer or flat bed.

IMPORTANT
Even if a vehicle is equipped with mirrors (interior or exterior) or cameras (front or rear), there will always be remaining blind spots all around the vehicle.

PRACTICE EXERCISES

Before you go out for a ride, it is very important to familiarize yourself with the handling of your vehicle by practicing in a controlled environment. If possible, it is also a very good idea to take a more formal training course to sharpen your skills and increase your knowledge of the vehicle.

Find a suitable area to practice and perform the following exercises. It should be at least 45 m x 45 m (150 ft x 150 ft) free of obstacles like trees and rocks. Once you've selected a suitable permitted location, proceed with the following exercises.

Turning Exercises

Turning is one of the most frequent causes of accidents. It is easier for the vehicle to lose traction or rollover if you turn too sharply, or go too fast. Slow down when you approach a turn.

- First learn how to perform slight right turns at very low speeds. Release the throttle before turning and slowly reapply the throttle when turning.
- Repeat turning exercise but this time maintain the throttle at the level while turning.
- Finally, repeat turning exercise while accelerating slowly.
- Practice exercises turning on the other side.

Note how your vehicle reacts in these different exercises. We recommend releasing the throttle before entering a turn to help initiate directional change. You will feel the lateral force increasing with the speed and with your steering input. The lateral force should be maintained as low as possible to make sure it does not cause the vehicle to roll over.

U Turn Exercises

Practice doing U turns.

- Accelerate slowly and while remaining at low speed, then gradually turn the steering wheel to the right until you have completed the U turn.
- Repeat U turn exercise with different steering inputs and always at a very low speed.
- Repeat U turn exercise on the other side.

As mentioned before in this guide, do not ride on paved surfaces as the vehicle behavior will not be the same, increasing the risk of rollover.

Braking Exercises

Practice braking to get familiar with the brake response.

- Do it at low speed first, then increase the speed.
- Practice braking in straight line at different speeds and different braking force.
- Practice emergency braking; optimal braking is obtained in straight line, with high force applied, without locking the wheels.

Remember, braking distance depends on vehicle speed, load and the type of surface. Also, the tires and brakes conditions play a major role.

Reverse Exercises

The next step involves using the reverse.

- Install 1 cone marker on both sides of the vehicle beside each rear wheel. Move the vehicle forward until you can see the cone markers, then stop the vehicle. Acknowledge the distance required to see obstacles behind you.
- Learn how the vehicle handles itself in reverse and reacts with steering inputs.
- Always perform this reverse exercise at slow speeds.

Emergency Engine Stopping Exercise

Learn how to stop your engine quickly in an emergency situation.

- While running at low speed, simply pull the D.E.S.S. key from the D.E.S.S. post.

This is to familiarize you with the vehicle's reaction when the engine is turned off while driving and to develop this reflex.

It is also important to be able to stop and exit the vehicle quickly.

- Immobilize the vehicle.
- Detach the seat belt and the net to exit the vehicle.

RIDE SAFELY

Perform pre-ride inspection to confirm the safe operating condition of your vehicle, refer to Pre–Ride Inspection, page 2-81.

Driver and passengers must:

- Be properly seated.
- Latch nets or doors.
- Fasten seat belt.
- Wear appropriate riding gear, refer to Protective Gear, page 2-7.

Avoid Rollovers and Tipovers

Side-by-side vehicles handle differently from other vehicles. Side-by-side vehicles are designed to handle off-road terrain (for example, their wheel base and track width, ground clearance, suspension, drivetrain, tires, etc.), and, as a result, can overturn in situations where vehicles designed for use primarily on paved or smooth terrain may not.

A rollover or other accident can occur quickly during abrupt maneuvers such as sharp turns or hard acceleration or deceleration when turning, or when driving on hills or over obstacles. Abrupt maneuvers or aggressive driving can cause rollovers or loss of control even in flat open areas. If the vehicle rolls over, any part of your body (such as arms, legs, or head) outside of the cockpit can be crushed and trapped by the cage or ROPS or other parts of the vehicle. You can also be injured by impact with the ground, cockpit or other objects.

To reduce the risk of rollovers:

- Use care when turning.
  - Do not turn the steering wheel too far or too fast for your speed and environment. Adjust steering inputs according to your speed and environment.
  - Slow down before entering a turn. Avoid hard braking during a turn.
  - Avoid sudden or hard acceleration when turning, even from a stop or low speed.
- Never attempt donuts, skids, slides, fishtails, jumps, or other stunts. If vehicle starts to skid or slide, steer in the direction of the skid or slide. Never slam the brakes and lock the wheels.
- Avoid paved surfaces. This vehicle is not designed to operate on paved surfaces and is more likely to roll over. If you must drive on pavement, turn gradually, go slowly, and avoid abrupt acceleration and braking.

This vehicle can roll over sideways or tip over forward or backwards on slopes or uneven terrain.

- Avoid side hilling (driving along the slope rather than up or down a hill). When possible, drive straight up and down inclines rather than across them. If you must side hill, use extreme caution and avoid slippery surfaces, objects, or depressions. If you feel the vehicle start to rollover or slide sideways, steer downhill if possible.
- Avoid steep hills and follow procedures in this guide for climbing and descending hills.
- Sudden changes in terrain such as holes, depressions, banks, softer or harder ground or other irregularities may cause the vehicle to tip or become unstable. Observe the terrain ahead and slow down in areas of uneven terrain.

This vehicle will handle differently when carrying or pulling a load.

- Reduce speed and follow instructions in this manual for carrying cargo or pulling a trailer.
- Avoid hills and rough terrain.
- Allow more distance to stop.

Be Prepared in Case of Rollover

- Fasten doors and side nets, if equipped, and fasten seat belts to help you avoid sticking arms or legs out of the vehicle.
- Never grab the cage or ROPS while riding. Hands can be crushed between the cage or ROPS and the ground in a rollover. Keep hands on the steering wheel or handholds.
- Never try to stop a rollover using your arms or legs. If you think that the vehicle may tip or roll, the driver should keep both hands on the steering wheel and the left foot firmly planted on the footrest. The passengers should keep both hands on the handhold and both feet firmly planted on the floor.

Avoid Collisions

This vehicle can reach high speeds. At higher speeds, there is an increased risk of losing control, particularly in challenging off-road conditions, and the risk of injury in a collision is greater. Never operate at excessive speeds. Always go at a speed that is proper for the terrain, visibility, and operating conditions, and your experience. Consider reserving use of the performance key for situations in which full speed and acceleration capability are appropriate.

Never operate this vehicle on any public street, road or highway, even dirt or gravel ones. Riding your vehicle on roads or highways could result in a collision with another vehicle. This vehicle is not designed for operation on roads. For example, it does not meet motor vehicle safety standards that apply to automobiles. In many jurisdictions it is not legal to operate this vehicle on public roads.

This vehicle does not have the same kind of protection for collisions as a car; for example, there are no air bags, the cockpit is not fully enclosed, and it is not designed for collisions with other vehicles. Therefore, it is particularly important to fasten seat belts and side nets and wear an approved helmet.

Off-Road Operation

The very nature of off-road operation is dangerous. Any terrain, which has not been specially prepared to carry vehicles, presents an inherent danger where terrain substance, shape and steepness are unpredictable. The terrain itself presents a continual element of danger, which must be knowingly accepted by anyone venturing over it.

An operator who takes a vehicle off-road should always exercise the utmost care in selecting the safest path and keeping close watch on the terrain ahead of him. The vehicle should never be operated by anyone who is not completely familiar with the driving instructions applicable to the vehicle, nor should it be operated on steep or treacherous terrain.

The traction of the tires will vary depending on the surface conditions and the tread pattern.

The traction may be reduced on many surfaces (rock, sand, mud, snow, ice, etc.). Reduce your speed and allow more space to turn.

WARNING

Never stand behind or near a rotating tire. Debris could be projected causing severe injuries.

General Driving Tips

Care, caution, experience and driving skill are the best precautions against the hazards of vehicle operation.

Whenever there is the slightest doubt that the vehicle can safely negotiate an obstacle or a particular piece of terrain, always choose an alternate route.

In off-road operation, power and traction, not speed, are important. Never drive faster than visibility and your own ability to select a safe route permit. Always go slowly and be extra careful when operating on unfamiliar terrain. Always be alert to changing terrain conditions when operating this vehicle. Be especially cautious on excessively rough, slippery, icy or loose terrain.

Constantly watch the terrain ahead for sudden changes in slopes or obstacles, such as rocks or stumps, that may cause loss of stability, resulting in tip over or rollover.

Never operate the vehicle if the controls do not function normally. See an authorized Can-Am Off-road dealer.

To maintain proper control it is strongly advised that you keep your hands on the steering wheel and within easy reach of all controls. The same holds true for your feet. To minimize the possibility of any leg or foot injury, keep your left foot on the footrest and right foot on the floor at all times. Staying completely within the cockpit will also help keep you from striking objects outside the vehicle.

Watch for and avoid branches and other objects that could enter the occupant compartment and strike you or your passengers.

Operating in Reverse

WARNING

Steering inputs in reverse operation increase the risk of rollover.

WARNING

When driving downhill in reverse, gravity can increase the vehicle speed above safe reverse speed.

Always make sure that the rear immediate surrounding of the vehicle is clear to ensure no one is behind before backing up slowly. Reducing the volume of the radio or music is also recommended before backing up. Pay attention to blind spots.

When it is safe to proceed in reverse, go slowly and avoid sharp turns.

In reverse operation, the engine RPM is limited thus limiting the vehicle reverse speed.

Crossing Roads

If you have to cross a road, ensure to have complete visibility on both sides for incoming traffic and decide on exit point on other side of road. Drive in a straight line toward that point. Do not make sharp direction changes or abrupt accelerations as it may result in a rollover situation. Do not travel on sidewalks or bicycle trails as they are designated specifically for those uses.

Riding on Paved Surfaces

Avoid paved surfaces. This vehicle is more likely to roll over on pavement because of the increase tire grip.

If you must drive on pavement, turn gradually, go slowly, and avoid abrupt acceleration and braking.

Shallow Water Crossing

Water can be a unique hazard. If it is too deep the vehicle may “float” and topple. Check the water depth and current before you attempt to cross any water.

Water depth should not exceed the center of the wheels for vehicle to safely cross the obstacle.

Beware of slippery surfaces such as rocks, grass, logs, etc., both in the water and on its banks. A loss of traction may occur. Do not attempt to enter the water at high speed.

Water will affect the braking ability of your vehicle. Make sure you dry the brakes by applying them several times after the vehicle leaves the water.

Mud or marsh lands may be encountered near water. Be prepared for sudden “holes” or changes in depth. Similarly so, be watchful of hazards such as rocks, logs, etc., partially covered by vegetation.

Riding on Snow or Ice

When performing pre-ride inspection, pay special attention to locations on the vehicle where snow and/or ice accumulations may obstruct visibility of the tail lamp, clog ventilation openings, block the radiator and fan, and interfere with the movement of controls.

Before starting with your vehicle, check the steering, accelerator and brake pedals for interference free operation.

Whenever this vehicle is ridden on a snow covered drive path, the tire grip is generally reduced causing the vehicle to react differently to control inputs from the operator. On low grip surfaces, the steering responses are not as crisp and precise, stopping distances are lengthened and acceleration is also affected. Slow down and be gentle on the accelerator. This will only result in spinning of the tires and possibly in an over steering slide of the vehicle. Avoid hard braking. This will possibly result in a straight line slide of the vehicle. Again, the best advice is to safely reduce speed in anticipation of a maneuver to give yourself time and distance in order to keep control of the vehicle.

As you drive your vehicle over a loose snow covered surface, snow dust will be picked up in the wake turbulence of the moving vehicle and transported to contact and accumulate or melt on some exposed components including rotating parts like brake discs. Water, snow or ice may affect the response time of the brake system of your vehicle. Even when not required to reduce vehicle speed apply brakes frequently to prevent ice or snow accumulation and to dry brake pads and discs. While doing so in low risk driving situations you will test for grip level and keep yourself alerted to how the vehicle reacts to your control inputs. Always keep brake and accelerator pedals and floor boards free of snow and ice. Frequently wipe snow off seat, steering wheel, headlights and tail lamps.

The depth of the snow cover may hide rocks, tree stumps or other objects and if it is wet may totally impede the drivability as the vehicle becomes bogged down or completely looses traction in slushy snow. Look far ahead and always be watchful of any visible clues that might indicate the presence of such obstacles. In doubt steer clear. Avoid driving on any frozen waterways before checking that the ice will safely support the vehicle, its riders and its load of cargo.

At the end of each ride it is a good practice to clean the vehicle and all moving components (brakes, steering components, drivelines, controls, radiator fan etc.) from any snow or ice accumulations. Wet snow will turn to ice during the shut down period and become more difficult to remove at the next pre-ride inspection.

Riding on Sand

Sand and riding on sand dunes is another unique experience but there are some basic precautions that should be observed. Wet, deep or fine sand may create a loss of traction and cause the vehicle to slide, drop off or become “bogged” down. If this occurs look for a firmer base. Again, the best advice is to slow down and be watchful of the conditions.

When riding in sand dunes it is advisable to equip the vehicle with an antenna type safety flag. This will help make your location more visible to others over the next sand dune. Proceed carefully should you see another safety flag ahead.

Riding on Gravel, Loose Stones or Other Slippery Surfaces

Riding on loose stones or gravel is very similar to riding on ice. They will affect the steering of vehicle, possibly causing it to slide and tip over especially at high speeds.

In addition, braking distance may be affected.

Remember that rapid accelerations or sliding may cause loose stones to be ejected rearwards into the path of another rider's way. Never do it deliberately.

During a slide or a skid, counter steer may help to regain the control. Never jam the brakes and lock the wheels.

Crossing Obstacles

It is a good practice to use the low range (L) when crossing obstacles.

Obstacles on the “trail” should be traversed with caution. This includes rocks, fallen trees, and depressions. You should avoid them whenever possible.

Remember that some obstacles are too large or dangerous to cross and should be avoided.

As a guideline, never attempt to cross an obstacle higher than the ground clearance of the vehicle. Small rocks or small fallen trees may be safely crossed - approach obstacle at low speed and as much as possible at a right angle. Adjust speed without losing momentum and do not accelerate abruptly.

Passengers must grasp handholds firmly and brace feet on the floor.

Hold steering firmly without closing your fists around it and proceed. Be aware that the obstacle may be slippery or may move while crossing.

Hill Driving Conditions

When driving on hills or slopes, two things are highly important: be prepared for slippery surfaces or terrain variations and obstacles and brace yourself properly inside vehicle. If you climb or descend a hill that is too slippery or has too loose a surface, you can lose control. If you go over the top of a hill at high speed, you may not have time to prepare for the terrain on the other side. Avoid parking on a slope. Always put the shift lever in PARK when stopped or parked, especially on an incline, to avoid rolling. If you must park on a steep incline, block the wheels using rocks or bricks.

Uphill Driving

Use the low range (L) for uphill driving.

Due to its configuration, this vehicle has very good traction even while climbing, so much so that tip over is possible before traction is lost. For example, it is common to encounter terrain situations where the top of the hill has eroded to a point that the hill peak rises very sharply. This vehicle is not designed to negotiate such a condition. Take an alternate route.

It is also wise to know the terrain condition on the other side of the hill or bank. All too often there exists a sharp drop-off that is impossible to negotiate or descend.

If you feel that the slope is getting too steep to climb, apply brakes to immobilize vehicle. Put shift lever in reverse (R), and back down the hill, barely releasing brakes to remain at low speed. Do not attempt to turn around. Never coast down hill while vehicle is in neutral. Do not perform hard braking as it increases the risk of tipover.

Downhill Driving

This vehicle can climb steeper slopes than it can descend safely. Therefore, it is essential to assure that a safe route exists to descend a slope before you climb it.

Decelerating while negotiating a slippery downhill slope could “toboggan” the vehicle, causing it to slide. Maintain steady speed and/or accelerate slightly to regain control. Never slam brakes and lock the wheels.

Side Hilling

Whenever possible, side hilling (driving across a slope rather than up or down it) should be avoided. If necessary, do so with extreme caution. Side hilling on steep inclines could result in rollover. In addition, slippery or unfirm surfaces could result in uncontrollable side sliding. Avoid all objects or depressions that will intensify the raising of one side of the vehicle higher than the other, thus causing rollover. If you feel the vehicle start to rollover or slide sideways, steer downhill if possible.

WARNING

Be careful when loading and transporting liquid reservoirs. They can affect vehicle stability when side hilling by pulling downhill and increasing the risk of a rollover.

Drop-Offs

This vehicle is not designed to negotiate drop-offs. It will “bottom-out” and usually stop if either the front or rear wheels are driven over a drop-off. If the drop is sharp or deep, the vehicle will nose dive and tip over.

Avoid negotiating drop-offs. Reverse and select an alternate route.

Recreational, Group and Distance Riding

Respect the rights and limitations of others. Stay away from areas designated for other types of off road use. This includes snowmobile trails, equestrian trails, cross country ski trails, mountain bike trails, etc. Never assume there are no other users on the trail. Always stay to the right of the trail and do not zig zag to one side of the trail then the other. Be prepared to stop or pull off to the side if another trail user appears in front of you.

Join a local side-by-side vehicle club. It will provide you with a map and advice or inform you where you can ride. If a club does not exist in your area, help to start one. Group riding and club activities provide a pleasurable, social experience. Never use this vehicle with drugs or alcohol, or tired or ill.

Always keep a safe distance from other riders. Your judgment of speed, terrain conditions, weather, mechanical condition of your vehicle and the “trust in judgment” you have in others around you will help you make a better choice of appropriate safe distance. This vehicle, like any other motorized vehicle, cannot stop “on a dime”.

Before you ride, tell someone where you are planning to travel and your expected time of return.

Depending on the length of your ride, carry additional tools or emergency equipment. Find out where you can get additional gasoline. Be prepared for the possible conditions you may encounter. An emergency first aid kit should always be a consideration.

Environment

One of the benefits of this vehicle is that it can take you off the beaten path away from most communities. However, you should always respect nature and the rights of others to enjoy it. Do not ride in environmentally sensitive areas. Do not drive over forest crops or shrubs, nor cut down trees or take down fencing, nor spin your wheels and destroy the terrain. “Tread Lightly”.

This vehicle can cause OHV wildfires if debris builds up near the exhaust or other engine hot spots and ignites then falls off into dry grass. Avoid riding in wet areas, through muskeg or tall grass, where debris can build up. Should you ride in those areas, inspect and remove all debris from your engine and hot spots. Refer to *Vehicle Care* for details.

Chasing wildlife is in many areas illegal. Wildlife can die of exhaustion after being chased by a motorized vehicle. If you encounter animals on the trail, stop and observe quietly and with caution. It will be one of the better memories of your life.

Observe the rule “what you take in, carry out”. Do not litter. Do not start campfires unless you have permission to do so, and then only away from dry areas. The hazards you may create on the trail may cause injury to others or yourself, even at a later date.

Respect farm lands. Always obtain the permission of the landowner before riding on private land. Respect crops, farm animals and property lines.

Finally, do not pollute streams, lakes or rivers and do not modify the engine or exhaust system, or remove any of its components as it will alter the vehicle emissions.

MOVING LOADS AND DOING WORK

Working with Your Vehicle

Your vehicle can help you perform a number of different LIGHT tasks ranging from snow removal to pulling wood or carrying cargo. A variety of accessories are available from your authorized Can-Am Off-road dealer. To prevent possible injury, follow the instructions and warnings that accompany the accessory. Always respect the load limits of the vehicle. Overloading the vehicle can overstress the components and cause failure. Avoid overexerting yourself if you lift or pull heavy loads or manually push the vehicle.

WARNING
Mounted machinery must be lowered on the ground before leaving the vehicle.

Carrying Loads

⚠ WARNING

Failure to follow these recommendations when carrying loads could lead to a loss of control and possibly in a tip over.

⚠ WARNING

Never carry gasoline container(s), other than approved BRP LinQ container or any dangerous liquids in the cargo box.

⚠ WARNING

Make sure all accessories, cargo and loose objects inside the vehicle are properly secured, or remove it to prevent from failing on the road and creating a hazard for following vehicles.

Any load carried on the vehicle will affect the handling, stability and braking distance of the vehicle.

Do not exceed the load limits of the vehicle, including the weight of operator, passengers, cargo, accessories and trailer tongue weight.

Appropriate loading and weight distribution are therefore important.

If the load is not properly secured, it may slide or fall off, possibly striking occupants or bystanders; or it may shift during riding, affecting the handling of the vehicle and cause an accident.

Ensure cargo stays far away from the exhaust outlet.

VEHICLE:

- Must use low gear if total payload is greater than 227 kg (500 lb).
- The maximum vehicle load includes occupants, cargo, accessories and trailer tongue weight if applicable.

CARGO BOX:

- The cargo box load must be evenly distributed and safely secured.
- Loaded as low as possible to reduce height of center of gravity.
- Do not secure cargo to the cage or other part of the vehicle.
- Avoid transporting cargo long enough to exceed the length of the cargo box and required to lower the tailgate.
- Ensure no cargo protrudes outside the cargo box and that cargo will not interfere with your rear view visibility.

TAILGATE:

- Put a load on the tailgate only while loading cargo into cargo box.
- Avoid operate the vehicle with tailgate open. Taillights and brake lights are not visible.

MAXIMUM VEHICLE LOAD LIMIT	
Californian models	545 kg (1,200 lb)
All other models	680 kg (1,500 lb)

MAXIMUM CARGO BOX LOAD LIMIT		
Cargo box	Californian models	272 kg (600 lb)
	CAB models	317.5 kg (700 lb)
	All other models	454 kg (1,000 lb)
Tailgate	All models	113 kg (250 lb)

The following is an example of suitable total vehicle load distribution:

Example of suitable loads Models with a 680 kg (1,500 lb) load limit, adjust according to your model load limit.				
Operator and Passen-gers	Cargo Box Load	Accesso-ries	Tongue Weight	Total Vehicle Load
226 kg (500 lb)	346 kg (762 lb)	40 kg (88 lb)	68 kg (150 lb)	680 kg (1,500 lb)

To reduce the risk to lose control or the load carried, follow these recommendations.

Vehicle Settings When Carrying Load

When carrying heavy loads or passengers, readjust suspension accordingly.

When carrying heavy loads in cargo box or pulling a loaded trailer, operate with the shift lever in L (low range).

⚠ WARNING
Must use LOW GEAR if total payload is greater than 227 kg (500 lb).

Loading the Cargo Box

⚠ WARNING

Avoid operate the vehicle with the tailgate open. Except when a tailgate extender is installed.

NOTICE

Be careful to not exceed the weight limit on the tailgate when loading or unloading the cargo box.

In general, ensure no item protrudes outside the cargo box.

Be particularly vigilant if cargo box wall extensions are installed and items are attached on the outside of them. In this case, selection items with a small thickness (shovel, ramps, hi-lift jack, etc.) and avoid items like chainsaw, gun case, fuel tanks, etc.

Items that protrude sideways can get snagged or caught in bush, branches, or other obstacles.

Avoid covering and obstructing the brake lights with the cargo.

Position cargo toward the front and center of the cargo box and as evenly distributed as possible.

Secure the load to the anchoring D-hooks inside cargo box. Use only the anchoring D-hooks on the floor of the cargo box; do not secure cargo to the cage or other part of the vehicle.

Load cargo as low as possible – a higher load can raise the vehicle's center of gravity, which can reduce stability.

Objects that are higher than the walls of the cargo box may act as projectiles in case of an accident.

If it is not properly secured, a load may slide or fall off, possibly striking occupants or bystanders; or it may shift during riding, affecting the handling of the vehicle.

Do not overload cargo box.

Close tailgate before operating the vehicle.

Operating While Carrying a Load

Reduce your speed when carrying cargo and turn gradually. Avoid hills and rough terrain. Allow more distance for braking. This vehicle may require additional stopping distance if carrying heavy loads, especially on inclined surfaces.

Hauling a Load

In an emergency situation, use the recovery hook to recover a stuck vehicle.

NOTICE

Never use the front recovery hook or the rear recovery point to pull a load.

These points must be used to pull a stuck vehicle.

NOTICE

A BRP approved rear hitch must be properly installed on the vehicle for hauling trailers.

Never pull a load by attaching it to the cage or any other accessories; this can cause the vehicle to tip over. Use only the trailer hitch (if installed) or winch (if installed) to pull a load.

In an emergency situation, use the recovery hook to recover a stuck vehicle.

When pulling loads with a chain or cable, ensure that there is no slack before starting and maintain tension while pulling.

When pulling loads with a chain or cable, be sure to brake progressively. The inertia of the load could lead to an impact.

When hauling a load, respect the maximum hauling capacity, refer to Pulling a Trailer, page 2-29.

WARNING

A slack in the chain or cable can cause it to break and snap back.

When pulling another vehicle, be sure that someone is controlling the pulled vehicle. They must brake and steer to prevent the vehicle from going out of control.

Before pulling loads with a winch, refer to the winch manufacturer's instructions.

Reduce your speed when hauling a load and turn gradually. Avoid hills and rough terrain. Never attempt steep hills. Allow more distance for braking, especially on inclined surfaces and when a passenger is on board. Be careful not to skid or slide.

Pulling a Trailer

NOTICE

A BRP approved rear hitch must be properly installed on the vehicle for hauling trailers.

Riding this vehicle with a trailer substantially increases the risk of toppling, especially on inclined slopes. If a trailer is used behind the vehicle make sure that its hitch is compatible with the one on the vehicle. Make sure the trailer is horizontal with the vehicle. (In some instances a special extension may have to be installed on the vehicle hitch). Use security chains or cables to secure the trailer with the vehicle.

Reduce your speed when pulling a trailer and turn gradually. Avoid hills and rough terrain. Never attempt steep hills. Allow more distance for braking, especially on inclined surfaces and when a passenger is on board. Be careful not to skid or slide.

Improperly loading a trailer may cause loss of control.

Always make sure load is evenly distributed and safely secured on the trailer; an evenly balanced trailer is easier to control.

Always put the shift lever to L (low range) for hauling a trailer – in addition to providing more torque, operating in low range helps account for the increased load on the rear tires.

When stopped or parked, block the vehicle and trailer wheels from possible movement.

Use caution when disconnecting a loaded trailer; it or its load may topple on you or others.

When hauling a trailer, respect the maximum tongue weight and towing capacity indicated on the label affixed to the hitch.

Make sure there is at least some weight on the tongue.

IMPORTANT ON-PRODUCT LABELS (CANADA/UNITED STATES)

Safety Hang Tag

This vehicle comes with a hang tag and labels containing important safety information.

Any person who rides this vehicle should read and understand this information before riding.

⚠ WARNING

THIS VEHICLE IS INTENDED FOR RECREATIONAL USE AND SECONDARY GENERAL UTILITY APPLICATIONS

NO OPERATOR UNDER AGE 16

TRAINING COURSES TO TEACH ROV DRIVING ARE AVAILABLE. FOR INFORMATION CONTACT YOUR DEALER.

Read the Operator's Guide and Safety Labels and Watch the Safety Video.
Follow All Instructions and Warnings.

CHECK WITH YOUR DEALER TO FIND OUT ABOUT STATE OR LOCAL LAWS REGARDING ROV OPERATION.

Improper Use of Off-Highway Vehicles Can Cause Severe Injury or Death

Be Prepared
- Fasten seat belts and make sure nets or doors are securely latched in place.
- Wear an approved helmet and protective gear.
- Each rider must be able to sit with back against seat, foot flat on the floor or on footrest, and hands on steering wheel or handholds. Stay completely inside the vehicle.

Drive Responsibly
Avoid loss of control and rollovers:
- Avoid abrupt maneuvers, sideways sliding, skidding or fishtailing, and never do donuts.
- Avoid hard acceleration when turning, even from a stop.
- Slow down before entering a turn.
- Plan for hills, rough terrain, ruts, and other changes in traction and terrain. Avoid paved surfaces.
- Avoid side hilling (riding across slopes).

Rollovers have caused severe injuries and death, even on flat, open areas.

Be Sure Riders Pay Attention and Plan Ahead
If you think or feel the vehicle may tip or roll, reduce your risk of injury :
- Keep a firm grip on the steering wheel or handholds and brace yourself.
- Do not put any part of your body outside of the vehicle for any reason.

Require Proper Use of Your Vehicle
– Do your part to prevent injuries:
- Do not allow careless or reckless driving.
- Make sure operators are 16 or older with a valid driver's license.
- Do not let people drive or ride after using alcohol or drugs.
- Do not allow operation on public roads (unless designated for off-highway vehicle access) – collisions with cars and trucks can occur.
- Do not exceed seating capacity: see information on back side of this card

THIS HANG TAG CAN'T BE REMOVED BEFORE SALE.

Tilt Table Test Result

BOMBARDIER RECREATIONAL PRODUCTS INC.
VEHICLE MODEL
TILT TABLE RESULT

Measurement of lateral stability, in degrees, of a sample, standard condition vehicle (with an operator and a passenger load - 430 pounds) as measured by the manufacturer in accordance with the tilt table lateral stability test in the ANSI/ROHVA standard for Recreational Off-Highway Vehicles. Vehicle modification, accessories, and loading can affect lateral stability.

Training courses to teach ROV driving are available. For information contact your dealer and/or rohva.org.

Check with your dealer to find out about state or local laws regarding ROV operation.

THIS HANG TAG IS NOT TO BE REMOVED BEFORE SALE.

VEHICLE MODEL NAME:

ENGINE DESCRIPTION:

EPA CERTIFIED

NER (NORMALIZED EMISSION RATE) = ☐
ON 0 TO 10 SCALE, 0 BEING THE CLEANEST.

BOMBARDIER RECREATIONAL PRODUCTS INC
***NO TO BE REMOVED PRIOR SALE.**

9536

Vehicle seating capacity: Occupants

Safety Labels

Read and understand all the safety labels on your vehicle.

These labels are affixed to the vehicle for the safety of the operator, passengers or bystanders.

The following labels are on your vehicle, and they should be considered permanent parts of the vehicle. They need to be clean and visible at all times. If missing or damaged, they need to be replaced. Safety labels are free of charge. See an authorized Can-Am Off-road dealer.

Upon replacement of parts that have warnings on them, make sure to order (free of charge) the applicable safety warnings if not already installed on the replacement part.

NOTE
In the event of any discrepancy between this guide and the vehicle, the safety labels on the vehicle have precedence over the labels in this guide.

General Warning Label

Models Without CAB	
	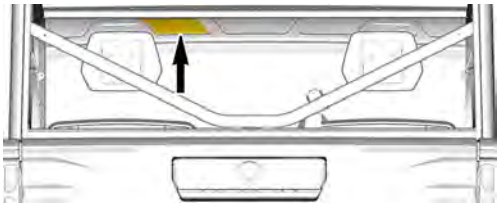

Models With CAB

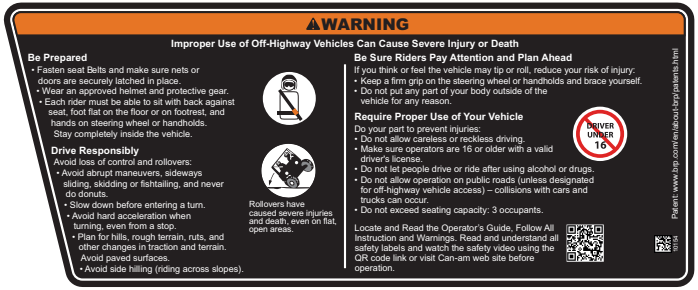

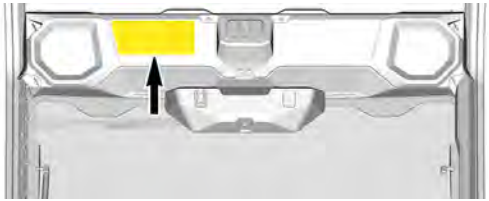

General Operating Warning Label

Models Without CAB only	
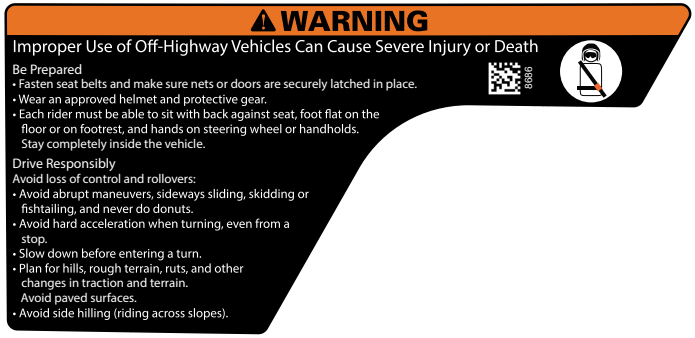	

Passenger Warning Label

Models Without CAB	
	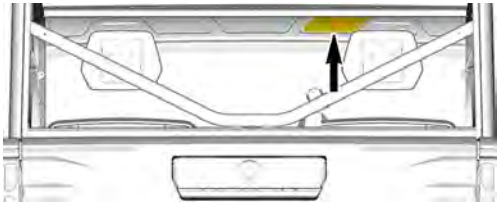

Models With CAB

Rollover — Warning Labels

LH side	
	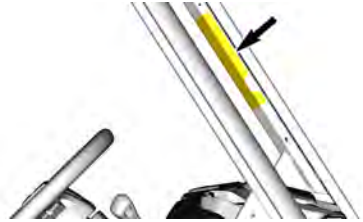

RH Side	
WARNING Be prepared in case of rollover If the vehicle rolls over, any part of your body (such as arms, legs, or head) outside of the cockpit can be crushed by the cage or other parts of the vehicle. Fasten seat belt and make sure net and/or door is securely latched in place to help you avoid sticking out arms or legs. NEVER hold the cage while riding. NEVER try to stop a rollover using your arm or leg. 9030	

2WD/4WD Selection — Warning Label

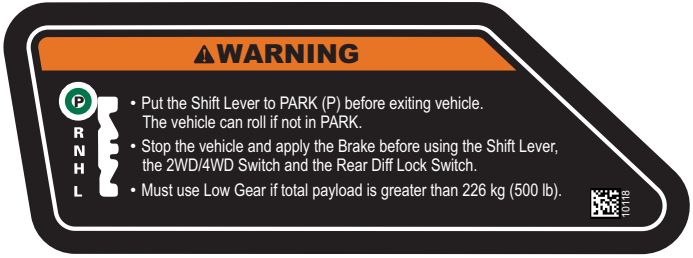

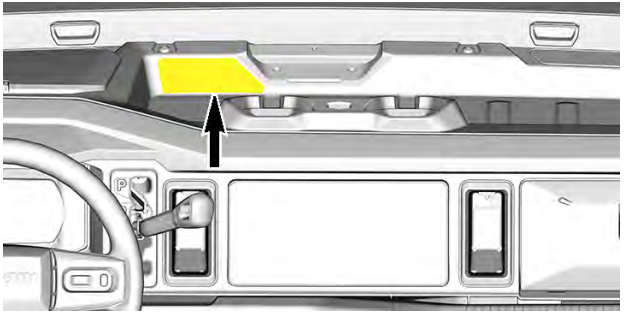

2WD/4WD/Front Diff Lock Selection — Warning Label

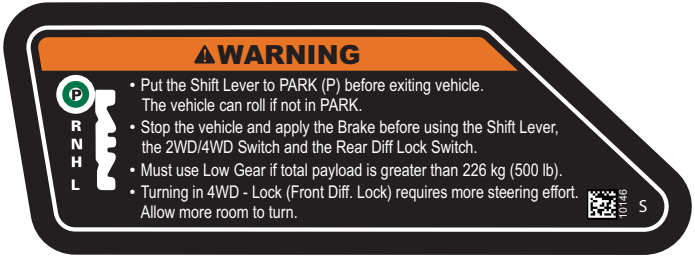

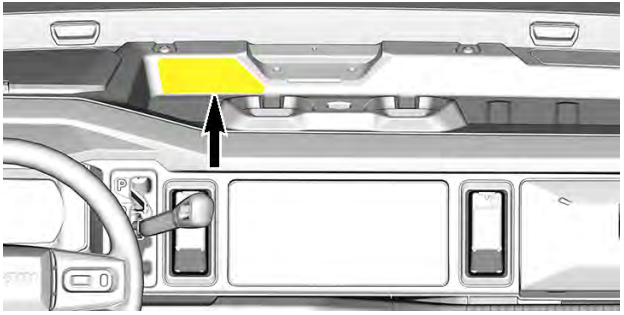

Tire Pressure and Maximum Load — Warning Label

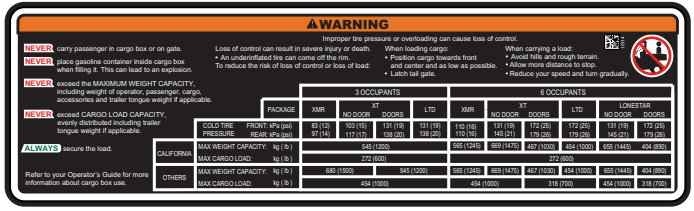

Pulling a Load Using the Cage – Warning Label

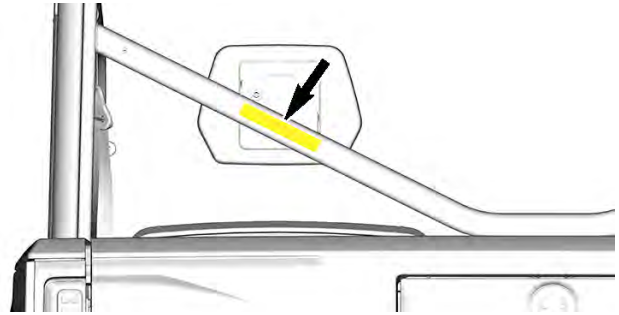

Door Warning Label

LH Door	
⚠ WARNING Do NOT put your arm outside of the vehicle or on the door while riding, there is a risk of SEVERE INJURY.	
	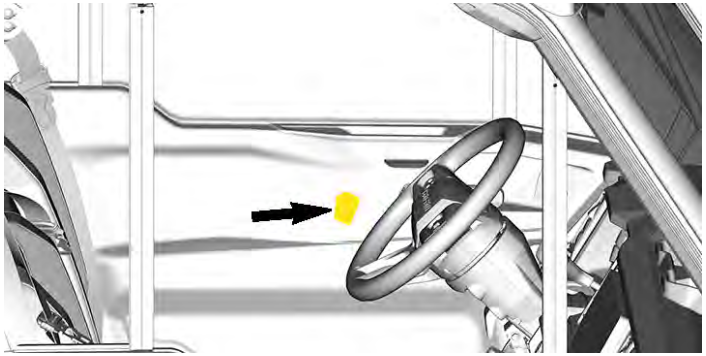

RH Door	
⚠ WARNING Do NOT put your arm outside of the vehicle or on the door while riding, there is a risk of SEVERE INJURY.	
	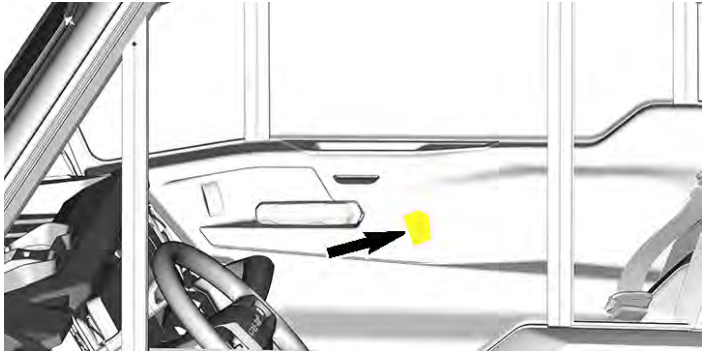

Off–Road Usage – Warning Label

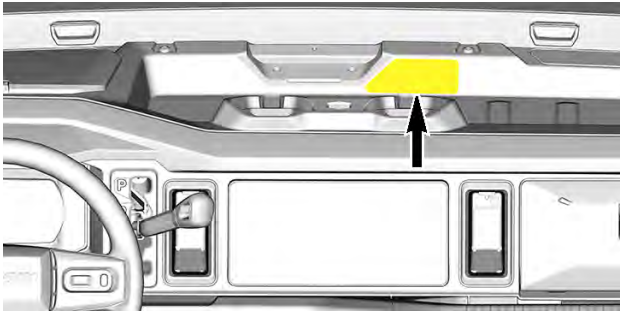

Cargo Box Pinch Point - Warning Label

WARNING

Pinch point.
Keep clear when lowering cargo box.

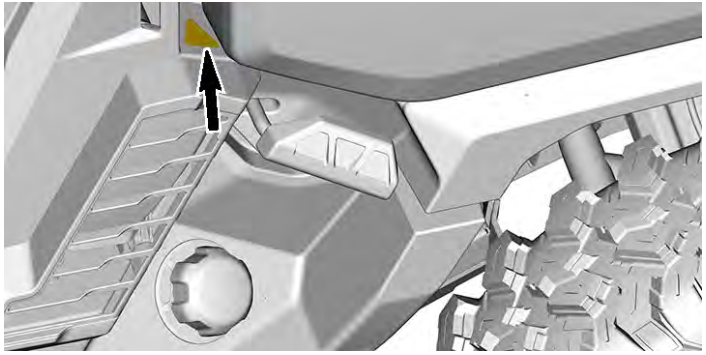

Towing and Tongue Weight - Warning Label

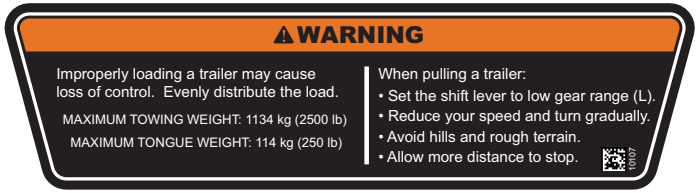

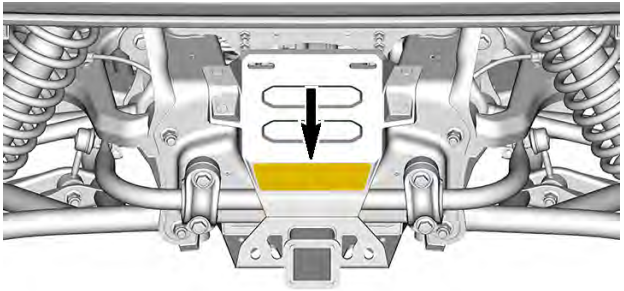

Winch Installation - Warning Label

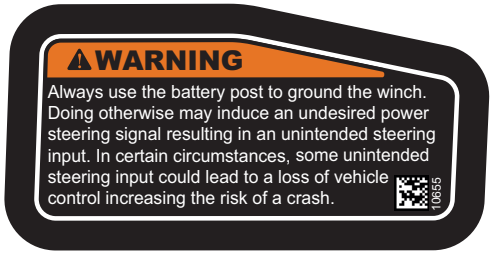

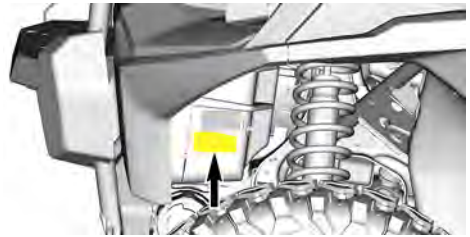

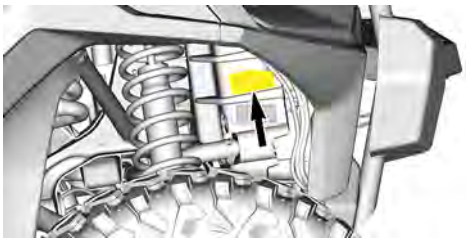

Coolant Hot - Warning Label

⚠ WARNING Do not open when HOT.	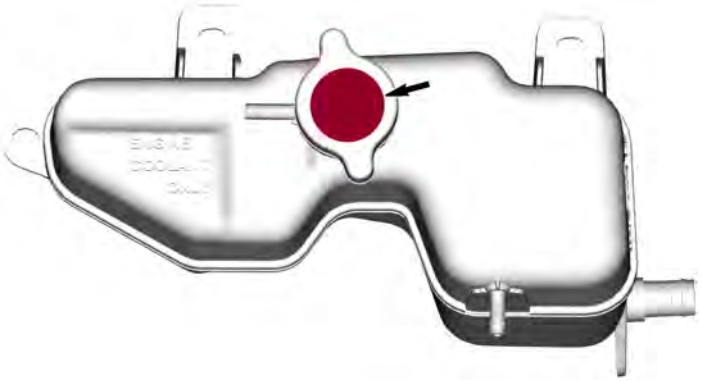

Exhaust — Hot Part Pictogram

⚠ CAUTION Do not touch when hot.	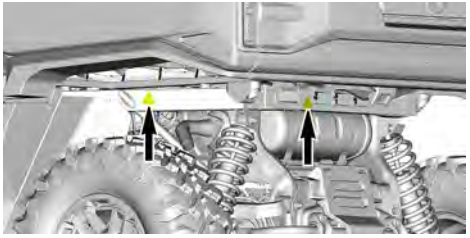

Molded Safety Pictogram

Molded Under Seat Storage Box Pictogram

WARNING Maximum weight in the seat storage box is 6 kg (13 lb).	

Molded Tailgate Pictogram

⚠ WARNING

Never carry passengers in cargo box or on tailgate.
Maximum weight on tailgate during loading is 113 kg (250 lb).

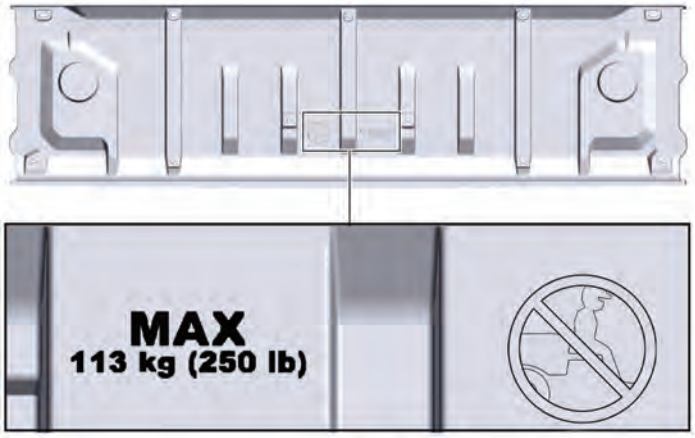

Compliance HangTag

California Proposition 65 Warning - Hang Tag

⚠ **WARNING**. Operating, servicing and maintaining an off-road vehicle can expose you to chemicals including engine exhaust, carbon monoxide, phthalates, and lead, which are known to the State of California to cause cancer and birth defects or other reproductive harm.
To minimize exposure, avoid breathing exhaust, do not idle the engine except as necessary, service your vehicle in a well-ventilated area and wear gloves or wash your hands frequently when servicing your vehicle.

For more information go to www.P65Warnings.ca.gov/products/passenger-vehicle

704906872

IMPORTANT ON-PRODUCT SAFETY PICTOGRAM

Safety Pictogram

Read and understand all the safety labels on your vehicle.

These labels are affixed to the vehicle for the safety of the operator, passengers or bystanders.

The following labels are on your vehicle, and they should be considered permanent parts of the vehicle. They need to be clean and visible at all times. If missing or damaged, they need to be replaced. Safety labels are free of charge. See an authorized Can-Am Off-road dealer.

Upon replacement of parts that have warnings on them, make sure to order (free of charge) the applicable safety warnings if not already installed on the replacement part.

NOTE
In the event of any discrepancy between this guide and the vehicle, the safety labels on the vehicle have precedence over the labels in this guide.

General Warning Label – Models without CAB

⚠ WARNING

- Make sure operators are 16 or older with a valid driver's license.
- Do not exceed seating capacity: 3 occupants.
- Do not let people drive or ride after using alcohol or drugs.
- Avoid loss of control and rollovers:
  - Avoid abrupt maneuvers, sideways sliding, skidding or fishtailing, and never do donuts.
  - Avoid hard acceleration when turning, even from a stop.
  - Slow down before entering a turn.
  - Plan for hills, rough terrain, ruts, and other changes in traction and terrain.
  - Avoid paved surfaces.
  - Avoid side hilling (riding across slopes).
- Rollovers have caused severe injuries and death, even on flat, open areas.
- Reduce your speed if you must used paved roads – collisions with cars and trucks can occur.
- Watch the safety video using the QR code link or visit Can-am web site before operation.

16+
3
max
https://can-am.brp.com/off-road/safety
7949
Patent : www.brp.com/en/about-brp/patents.html

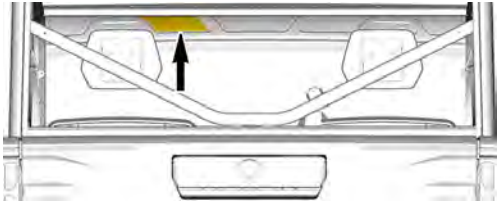

Operator Warning Label – Models with CAB

⚠ WARNING

- Read and understand all safety labels, locate and read operator's guide.
- Watch the safety video using the QR code link or visit Can-am web site before operation.
- Always wear an approved helmet and protective gear.
- Always wear ear protection.
- Fasten seat belts and make sure net or door is securely latched in place.
- Make sure operators are 16 or older with a valid driver's license.
- Do not allow operation on public roads (unless designated for off-highway vehicle access) – collisions with cars and trucks can occur.
- Avoid loss of control and rollovers:
  - Avoid abrupt maneuvers, sideways sliding, skidding or fishtailing, and never do donuts.
  - Avoid hard acceleration when turning, even from a stop.
  - Slow down before entering a turn.
  - Plan for hills, rough terrain, ruts, and other changes in traction and terrain.
  - Avoid paved surfaces.
  - Avoid side hilling (riding across slopes).
- Do not exceed seating capacity: 3 occupants.
- Each rider must be able to sit with back against seat, feet flat on the floor or on footrest, and hands on steering wheel or handholds.

- If you think or feel the vehicle may tip or roll, reduce your risk of injury : Keep a firm grip on the steering wheel or handholds and brace yourself. Do not put any part of your body outside of the vehicle for any reason.
- Always stay completely inside the vehicle.
- Do not let people drive or ride after using alcohol or drugs.

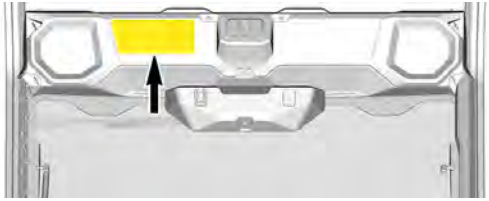

Operator Warning Label – Models without CAB

⚠ WARNING

- Read and understand all safety labels, locate and read operator's guide.
- Always wear an approved helmet and protective gear.
- Fasten seat belts and make sure net or door is securely latched in place.
- Always wear ear protection.
- Each rider must be able to sit with back against seat, feet flat on the floor or on footrest, and hands on steering wheel or handholds.
- If you think or feel the vehicle may tip or roll, reduce your risk of injury : Keep a firm grip on the steering wheel or handholds and brace yourself. Do not put any part of your body outside of the vehicle for any reason.
- Always stay completely inside the vehicle.

7947	

Passenger Warning Label – Models without CAB

WARNING

- Always wear an approved helmet and protective gear.
- Always wear ear protection.
- Fasten seat belts, and make sure net or door is securely latched in place.
- Each rider must be able to sit with back against seat, feet flat on the floor or on footrest, and hands on handholds.
- If you think or feel the vehicle may tip or roll, reduce your risk of injury:
  - Keep a firm grip on the steering wheel or handholds and brace yourself.
  - Do not put any part of your body outside of the vehicle for any reason.
- Always stay completely inside the vehicle.
- Do not let people drive or ride after using alcohol or drugs.

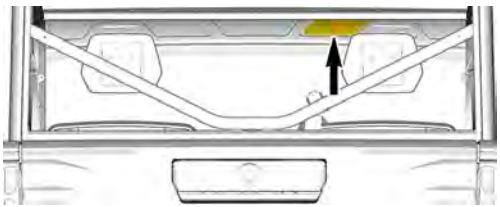

Passenger Warning Label – Models with CAB

⚠ WARNING

- Always wear an approved helmet and protective gear.
- Always wear ear protection.
- Fasten seat belts, and make sure net or door is securely latched in place.
- Each rider must be able to sit with back against seat, feet flat on the floor or on footrest, and hands on handholds.
- If you think or feel the vehicle may tip or roll, reduce your risk of injury:
  - Keep a firm grip on the steering wheel or handholds and brace yourself.
  - Do not put any part of your body outside of the vehicle for any reason.
- Always stay completely inside the vehicle.
- Do not let people drive or ride after using alcohol or drugs.

10222

Tire Pressure and Maximum Load – Warning Label

Models INT

WARNING

- Locate and read operator's guide. Improper tire pressure or overloading can cause loss of control, resulting in SEVERE INJURY or DEATH.
- Always maintain proper tire pressure as shown.
- NEVER exceed the vehicle load capacity, including weight of operator, passenger, cargo, accessories and trailer tongue weight if applicable.
- Do not overload cargo box.
- NEVER place gasoline container inside cargo box when filling it. This can lead to an explosion.
- NEVER carry passenger in cargo box or on tailgate.

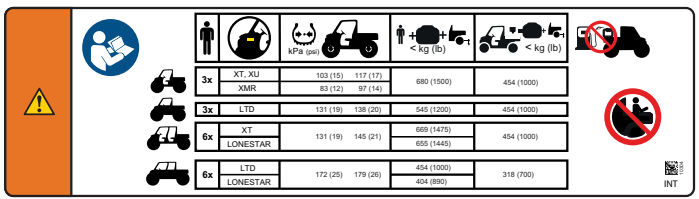

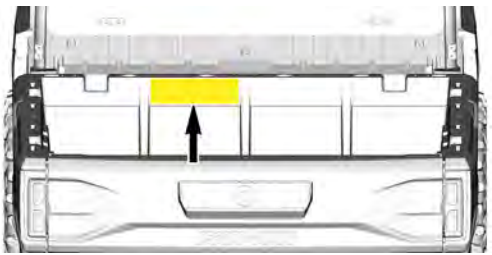

Other Models

WARNING

- Locate and read operator's guide. Improper tire pressure or overloading can cause loss of control, resulting in SEVERE INJURY or DEATH.
- Always maintain proper tire pressure as shown.
- NEVER exceed the vehicle load capacity, including weight of operator, passenger, cargo, accessories and trailer tongue weight if applicable.
- Do not overload cargo box.
- NEVER place gasoline container inside cargo box when filling it. This can lead to an explosion.
- NEVER carry passenger in cargo box or on tailgate.

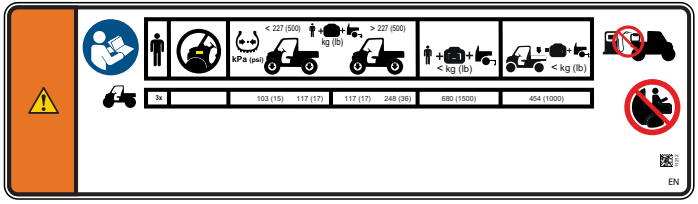

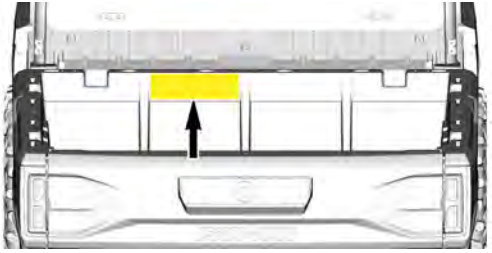

LH side
⚠ WARNING • Never hold the cage while riding. • Never try to stop a rollover using your arm or leg. • Fasten seat belts and make sure net or door is securely latched in place.

LH 7690	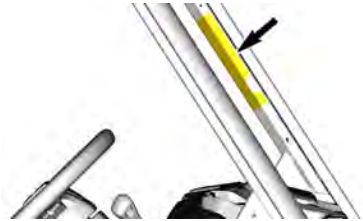

RH Side

WARNING

- Never hold the cage while riding.
- Never try to stop a rollover using your arm or leg.
- Fasten seat belts and make sure net or door is securely latched in place.

2WD/4WD Selection — Warning Label

WARNING

- Put the Shift Lever to PARK (P) before exiting vehicle. The vehicle can roll if not in PARK.
- Stop the vehicle and apply the brake before using the shift lever, the 2WD/4WD switch and the rear differential lock switch.
- Must use LOW gear if total payload is greater than 226 kg (500 lb).

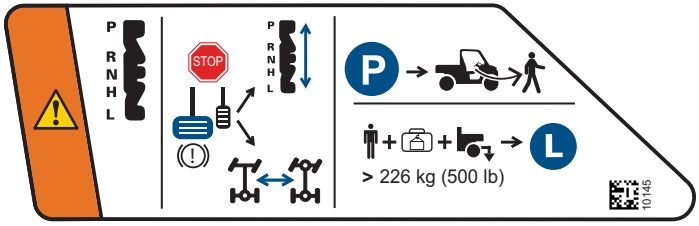

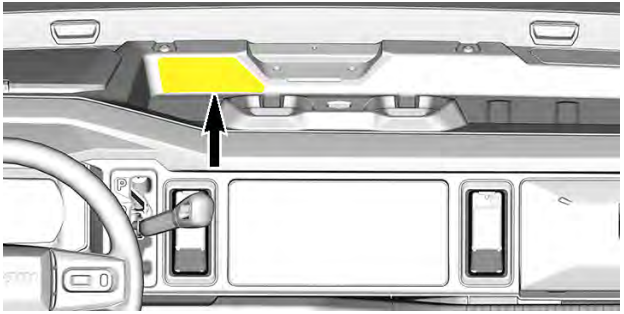

2WD/4WD/Front Diff Lock Selection — Warning Label

WARNING

- Put the Shift Lever to PARK (P) before exiting vehicle. The vehicle can roll if not in PARK.
- Stop the vehicle and apply the brake before using the shift lever, the 2WD/4WD switch and the front differential lock switch.
- Must use LOW gear if total payload is greater than 226 kg (500 lb).
- Turning in 4WD - lock (front differential lock) requires more steering effort. Allow more room to turn.

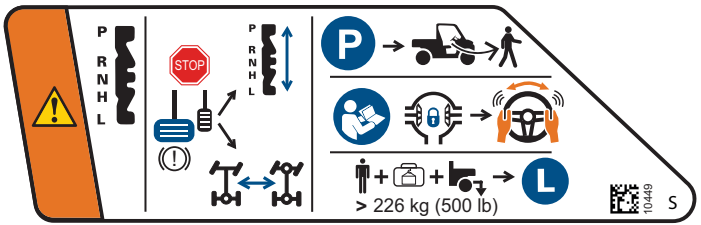

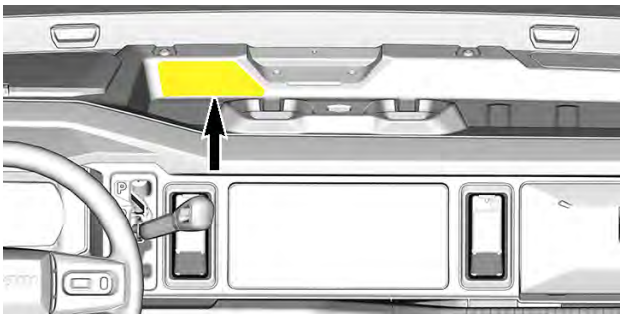

Towing and Tongue Weight - Warning Pictogram

WARNING

- Improperly loading a trailer may cause loss of control. Evenly distribute the load.
- When pulling a trailer:

  Set the shift lever to low gear range (L).

  Reduce your speed and turn gradually.

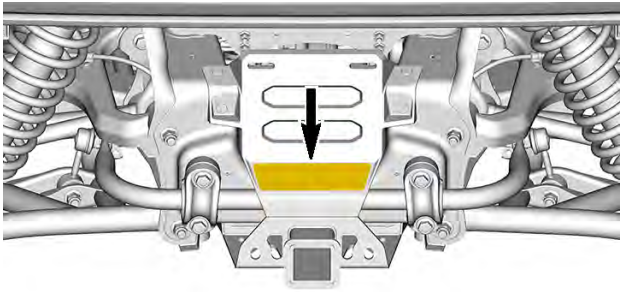

Cargo Box Pinch Point - Warning Label

WARNING

Pinch point.
Keep clear when lowering cargo box.

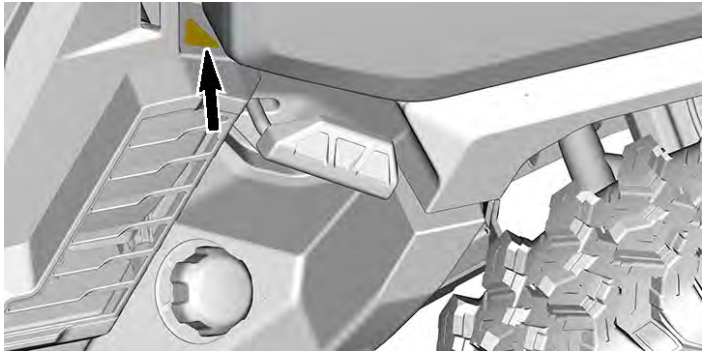

Pulling a Load Using the Cage – Warning Label

⚠ WARNING

- NEVER attach to the cage to pull a load. This can cause the vehicle to tip over. Use only the trailer hitch or recovery hook to pull a load.

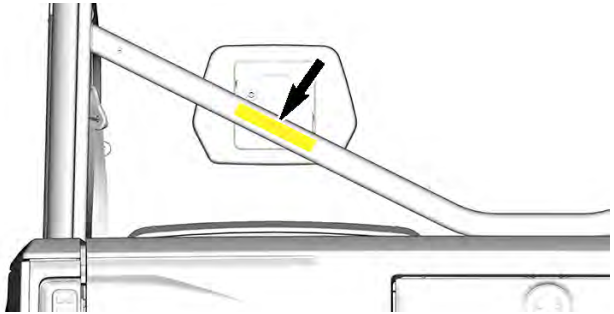

Winch Installation - Warning Label

WARNING

- Always use the battery post to ground the winch.
- Doing otherwise may induce an undesired power steering signal resulting in an unintended steering input.
- In certain circumstances, some unintended steering input could lead to a loss of vehicle control increasing the risk of a crash.

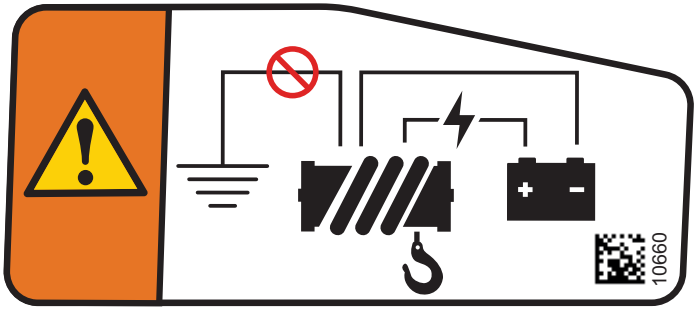

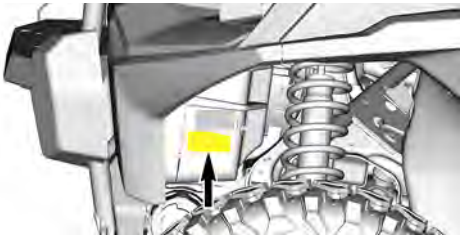

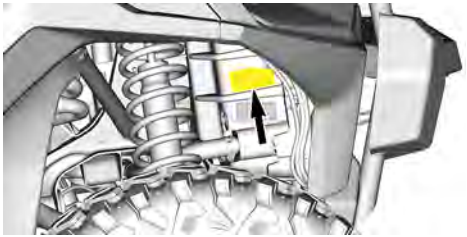

Coolant Hot - Warning Label

⚠ WARNING Do not open when HOT.	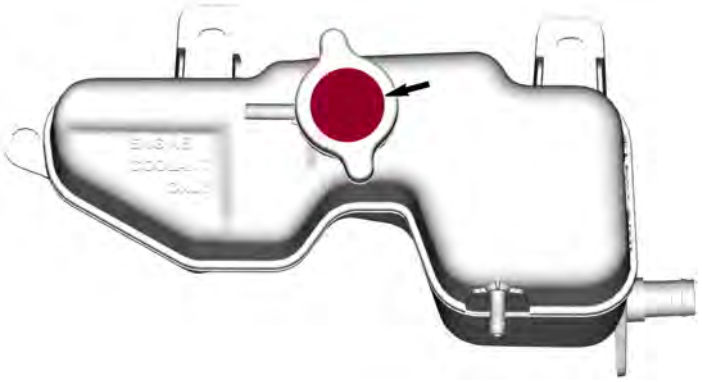

Exhaust — Hot Part Pictogram

⚠ CAUTION Do not touch when hot.	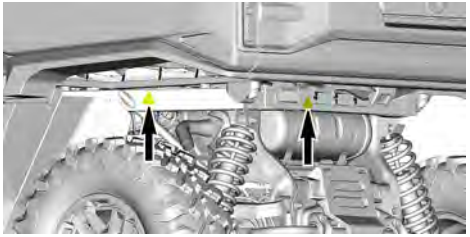

Molded Safety Pictogram

Molded Under Seat Storage Box Pictogram

WARNING Maximum weight in the seat storage box is 6 kg (13 lb).	

Molded Tailgate Pictogram

⚠ WARNING Never carry passengers in cargo box or on tailgate. Maximum weight on tailgate during loading is 113 kg (250 lb).	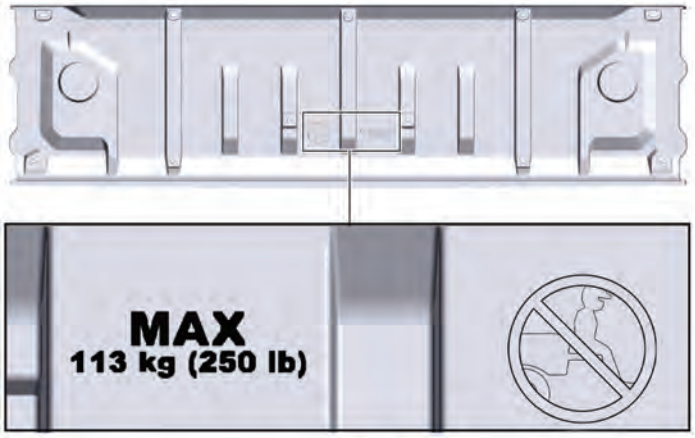

PRE–RIDE INSPECTION

Always inspect and confirm the safe operating condition of your vehicle prior to ride.

Always follow the maintenance schedule described in this Operator's Guide.

⚠ WARNING
Perform a pre-ride inspection before each ride to detect any potential problem that could occur during operation. The pre-ride inspection can help you monitor component wear and deterioration before they become a problem. Correct any problem that you discover to reduce the risk of a breakdown or crash.

Before using this vehicle, the operator should always perform the following pre-ride inspection check list.

Refer to Maintenance Procedures, page 4-26 for details.

Pre-Ride Inspection Check List

What to Do Before Starting the Engine (D.E.S.S. key not installed)

Items to Be Inspected	*Inspection to Perform*	✓
Engine oil (cool engine check)	Check engine oil level, refer to Engine Oil – Level Check, page 4-34.	
Coolant	Check coolant level, refer to Engine Coolant – Level Check, page 4-44.	
Brake fluid	Check brake fluid level, refer to Brake Fluid – Level Check, page 4-83.	
Engine air filter	Inspect the engine air filter, clean or replace if needed (service more often when riding in dusty conditions).	
HVAC air filters (if equipped)	Inspect HVAC air filters, clean if needed (service more often when riding in dusty conditions).	
Steering Wheel	Adjust steering wheel height to your preferences. Ensure steering is properly locked in position.	
Brake holding mechanism (If equipped)	Apply brake holding mechanism and check if it operates properly. Release the brake before moving the vehicle.	
Front grille and radiator	Inspect front grille and radiator for cleanliness.	
Seats and seat belts	Check if seats are properly latched.	
	Check seat belts for any damage. Fasten seat belts and confirm that they latch and unlatch securely.	
Side nets	Check side nets for any damage. Have the nets replaced if any damage is found. Fasten both side nets and confirm that they latch securely. Use the adjustment strap to tighten the net as required.	

Items to Be Inspected	*Inspection to Perform*	✓
Exhaust system	If not already done, clean the area surrounding the exhaust system, especially if during the last ride the vehicle was used in a swamp, bog, hay or dead leaves.	
Drive shaft bellows	Visually, check drive shaft bellows and protectors condition.	
Tires	Verify tire pressure and condition, refer to the *Tire Pressure Label* and adjust according to load.	
Wheels	Check wheels for damage and for abnormal play. Make sure that lug nuts are tightened to specification. Refer to WHEELS AND TIRES, page 4-79 for torque specification.	
Cargo and load	**Cargo Load:** If you transport a cargo, respect the maximum loading capacity, refer to Loading the Cargo Box, page 2-28. Ensure cargo is properly secured to the rear cargo box. **Vehicle Load:** Ensure that total load on the vehicle (including operator, passengers, cargo, tongue weight and added accessories) does not exceed specifications, refer to Carrying Loads.	
Rear cargo box	Check if the cargo box and the tailgate are properly latched.	
Hitch	If you are pulling a trailer or another equipment: • Check hitch and trailer ball condition. • Respect the tongue capacity and towing capacity as indicated on the label affixed to the hitch or refer to 6 TECHNICAL SPECIFICATIONS, page 6-2. • Ensure trailer is properly secured to hitch.	
Chassis and suspension	Check underneath vehicle for any debris on chassis or suspension components (upper and lower arms, wheels, shock absorber, springs) and clean them properly	

Items to Be Inspected	*Inspection to Perform*	✓
Doors	Check all doors for any damage. Have the doors replaced if any damage is found. Close all doors and confirm that they latch securely.	
Mirror(s) (if equipped)	Adjust mirror(s) to your preferences.	

What to Do Before Starting the Engine (With D.E.S.S. key installed)

ITEMS TO BE INSPECTED	*INSPECTION TO PERFORM*	✓
Digital display	Check operation of indicator lamps in digital display(during first few seconds after pressing briefly the Start/Stop button).	
	Check for messages in gauge.	
Lights	Check operation and cleanliness of: • Headlights (High and Low) • Taillights • Brake lights.	
Accelerator pedal	Press on the accelerator pedal a few times to ensure it operates freely and it returns to the rest position when released.	
Brake pedal	Press down on the brake pedal and make sure you feel firm resistance and that it fully returns to position when released.	
Fuel level	Check the fuel level.	

What to Do After the Engine is Started

ITEMS TO BE INSPECTED	*INSPECTION TO PERFORM*	✓
Engine oil (warm engine check)	Check engine oil level, refer to Engine Oil – Level Check, page 4-34	
Steering	Check if steering wheel operates freely by completely turning it from side to side.	
Start/Stop Switch	Start the engine then press the Start/stop button again to stop the engine Restart engine.	
D.E.S.S. key (engine stop switch function)	Pull the D.E.S.S. key to stop the engine. Reinstall the D.E.S.S. key and restart the engine.	
Shift lever	Press brake and move the shifter to verify its operation (P, R, N, H and L).	
2WD/4WD selector	Check operation of 2WD/4WD selector.	
Brakes	Drive forward slowly a few feet and apply brakes. The brake pedal must feel firm when applied. The pedal must return to rest position when released. The brakes must respond adequately to the driver's input.	
Winch (If equipped)	Check operation of winch.	
Horn (if equipped)	Check horn operation.	
HVAC/Heater fan (if equipped)	Check operation of HVAC/heater fan. Check air flows out of every louver according to selected output (defrost, vents, feet).	

REPORTING SAFETY DEFECTS

In Canada, if you believe that your vehicle has a defect which could cause a crash or could cause injury or death, you should immediately inform Transport Canada in addition to notifying Bombardier Recreational Products Inc.

If Transport Canada receives similar complaints, it may open an investigation, and if it finds that a safety defect exists in a group of vehicles, it may order a recall and remedy campaign. However, Transport Canada cannot become involved in any individual problems between you, your dealer or Bombardier Recreational Products Inc.

To contact Transport Canada:

819-420-4300 (Gatineau-Ottawa area or internationally)
Toll free : 1 800-333-0510 (in Canada)

Transport Canada - ASFAD
330 Sparks Street
Ottawa, ON
K1A 0N5

https://tc.canada.ca/

3 VEHICLE INFORMATION - TABLE OF CONTENTS

PRIMARY CONTROLS 3-3
STEERING WHEEL 3-3
ACCELERATOR PEDAL 3-5
BRAKE PEDAL 3-6
SHIFTER LEVER 3-7

SECONDARY CONTROLS 3-9
RF D.E.S.S Key and RF D.E.S.S. Post 3-9
ENGINE START/STOP BUTTON 3-10
KEYPAD 3-11
CLIMATE CONTROLS 3-12
HEADLIGHT DIMMER SWITCH 3-13
WINCH SWITCH 3-13
VOLUME SWITCH (if equipped) 3-14
POWER WINDOW SWITCHES (If Equipped) 3-14
WIPER / WINDSHIELD WASHER SWITCH (if equipped) 3-14
HORN SWITCH (on applicable models) 3-14

EQUIPMENT 3-15
CUP HOLDERS 3-15
PASSENGERS HANDHOLD 3-16
FRONT HOOD 3-17
STORAGE COMPARTMENTS 3-20
TROUBLESHOOTING TOOLS 3-25
RECOVERY POINTS 3-26
FOOTREST 3-27
SIDE NETS (if equipped) 3-27
SHOULDER GUARDS (if equipped) 3-27
FULL DOORS (If equipped) 3-28
SEAT BELTS 3-28
DRIVER'S SEAT 3-31
PASSENGER SEATS 3-31
FUEL RESERVOIR CAP 3-32
WINCH 3-33
INCLINABLE CARGO BOX 3-34
TRAILER HITCH 3-39
FRONT BUMPER 3-40
BRAKE HOLDING MECHANISM 3-40
WINDSHIELD WITH WIPER 3-41
CLIMATE CONTROL SYSTEM 3-44

4.5” DIGITAL DISPLAY 3-51
MULTIFUNCTION DISPLAY 3-51
SETTINGS 3-57

REFUELING 3-61
Fuel – Requirements 3-61
Fuel - Recommended Octane Rating 3-62

Fuel – Vehicle Fueling Procedure 3-62

BREAK-IN PERIOD. 3-64

Operation During Break-In 3-64

BASIC PROCEDURES. 3-65

Engine – Starting 3-65

Shift Lever – Operation 3-65

Parking the Vehicle and Stopping the Engine 3-66

Drive Belt Durability - Tips for Maximizing 3-67

SPECIAL PROCEDURES 3-68

Fuel Flooded Engine – Drowned Mode 3-68

CVT – Water Intrusion 3-68

Battery – Drained Out. 3-69

Vehicle - Rollover 3-71

Vehicle – Immersion. 3-72

TUNE YOUR RIDE. 3-73

Suspension – Adjustment Guidelines. 3-73

Suspension – Factory Settings. 3-73

Suspension – Adjustment 3-74

Dynamic Power Steering (DPS) Assist Level Adjustment 3-75

TRANSPORTING THE VEHICLE 3-76

Using Vehicle Power to Climb Onto Trailering Equipment 3-77

Using a Winch to Pull Vehicle Onto Trailering Equipment 3-78

Securing Vehicle for Transport 3-79

Getting Vehicle Out of Trailer 3-79

LIFTING AND SUPPORTING THE VEHICLE. 3-80

General Safety Information for Lifting. 3-80

PRIMARY CONTROLS

It is important to know the location and operation of all controls, and to develop and practice smooth and coordinated use of them.

Some vehicle safety labels are not shown on illustrations. For information on vehicle safety labels, refer to *Important On-Product Labels*.

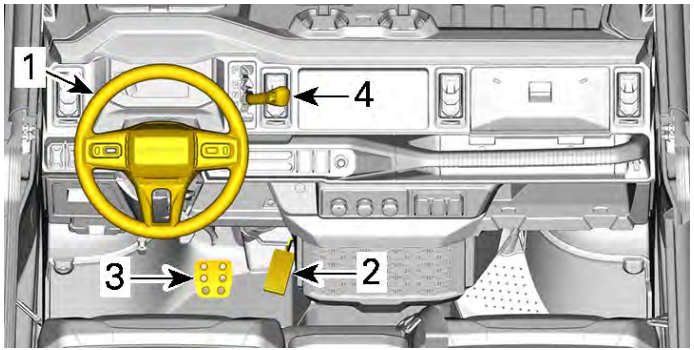

1. Steering wheel
2. Accelerator pedal
3. Brake pedal
4. Shifter lever

STEERING WHEEL

The steering wheel is located in front of the driver's seat.

It is used to steer the vehicle to the left or right. Turn the steering wheel in the direction you want to go.

Hold the steering wheel firmly with both hands, without closing your fists around it and proceed.

⚠ CAUTION

Under rough trail conditions or when crossing an obstacle, the steering wheel could suddenly jerk to one side, causing hand or wrist injuries if your fists are wrapped around the steering wheel.

When driving, the Dynamic Power Steering (DPS) reduces the effort required to turn the steering wheel.

The steering wheel also includes many controls.

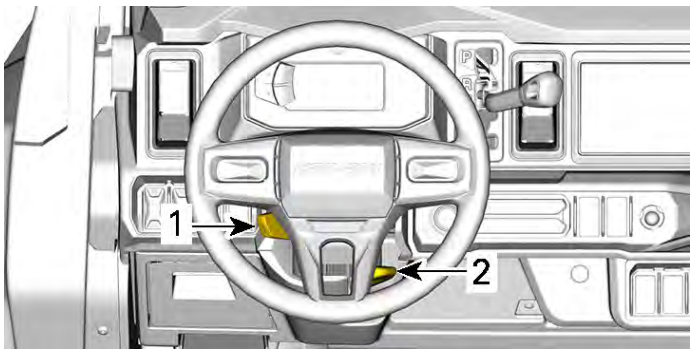

1. Steering column tilt lever
2. Steering wheel height adjustment lever

Adjusting the Steering Wheel Height

⚠ WARNING

Never adjust the steering wheel height while riding. You may lose control.

The steering wheel height is adjustable as per driver preferences.

Adjust the steering wheel height to face your chest, not your head.

To adjust steering wheel height:

1. Unlock steering wheel by pushing down the adjustment lever. The lever is located to the right side of the steering column.

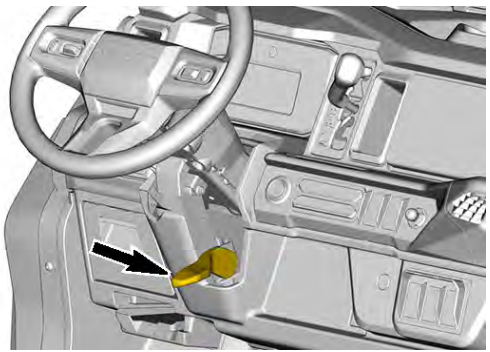

2. Move steering wheel to the desired position.
3. Hold the steering wheel in the desired position and push up the adjustment lever to lock the steering wheel in position.

Full–Tilt Up the Steering Column

WARNING

Never full-tilt up the steering column while riding. You may lose control.

Never drive the vehicle with the steering column in its upper position.

To help climbing or exiting the vehicle, the steering column may be lifted upright to create more room.

1. To exit the vehicle, pull the lever on the left side of the steering column and push the steering wheel towards the top of the dash.

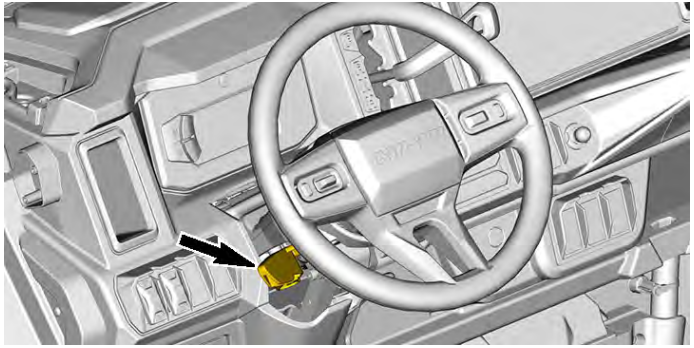

2. After seating, just lower to clip back in place. The steering wheel returns to the adjusted height before by the operator.

WARNING

Make sure steering column is properly locked before driving the vehicle.

ACCELERATOR PEDAL

The accelerator pedal is the right-most pedal.

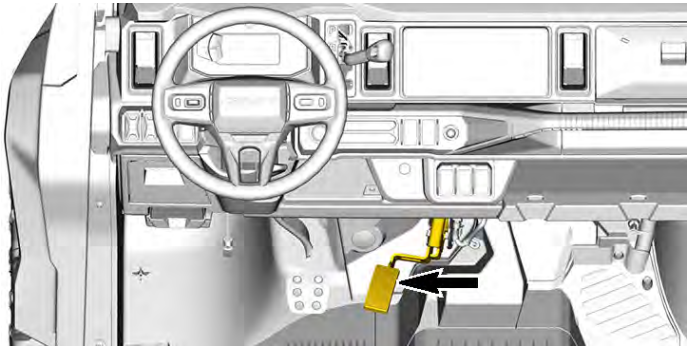

The accelerator pedal controls the vehicle speed and acceleration.

To increase or maintain vehicle speed, press on the accelerator pedal with your right foot.

To decrease vehicle speed, release the accelerator pedal.

The accelerator pedal is spring loaded and should return to its resting position (idle) when not pressed.

BRAKE PEDAL

The brake pedal is located to the left and is wider than the accelerator pedal.

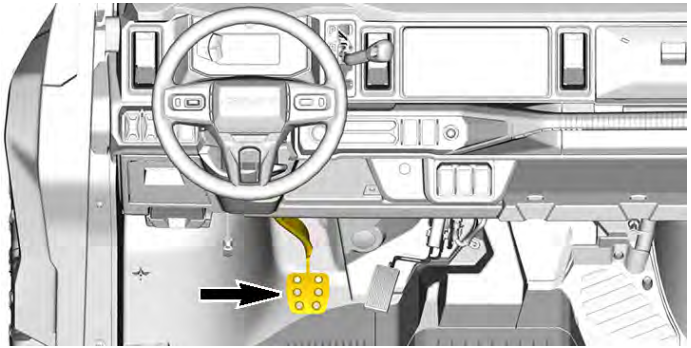

The brake pedal function is to slow or stop the vehicle.

To decrease vehicle speed or to stop the vehicle, press down on the brake pedal with your right foot.

The brake pedal is spring loaded and should return to its original position (released) when not pressed.

SHIFTER LEVER

The shift lever is located on the upper console to the right of steering wheel.

The shift lever is used to change the gearbox position.

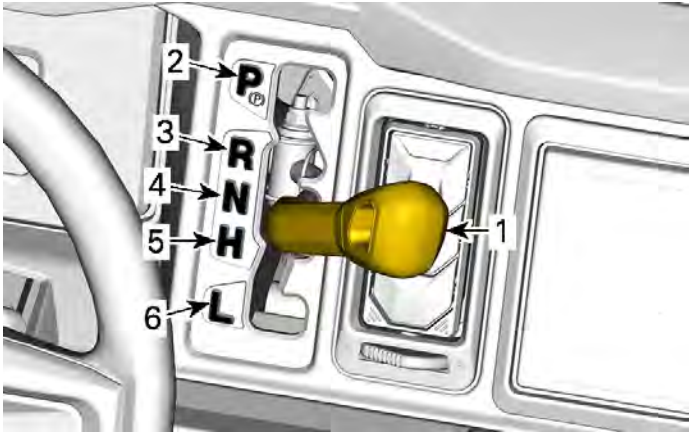

1. Shift lever
2. Park
3. Reverse
4. Neutral
5. High range (forward)
6. Low range (forward)

The vehicle must be stopped and brakes applied prior to selecting any gear.

⚠ WARNING

This gearbox is not designed to shift while vehicle is moving.

Park

The park position locks the gearbox to help prevent vehicle movement.

⚠ WARNING

Always use the PARK (P) position when the vehicle is not in operation. The vehicle can roll if the shift lever is not set to P (PARK).

Reverse

The reverse position allows the vehicle to go backwards.

Depending upon your particular vehicle configuration, a back-up alarm may be equipped on the vehicle. It goes on automatically when the reverse gear is selected.

NOTE
In reverse operation, the engine RPM is limited thus limiting the vehicle reverse speed.

WARNING
When driving downhill in reverse, gravity can increase the vehicle speed above safe reverse speed.

Neutral

The neutral position disengages the gearbox.

High Range (Forward)

This position selects the high speed range of the gearbox. It is the normal driving speed range. It allows the vehicle to reach its maximum speed.

Low Range (Forward)

This position selects the low speed range of the gearbox. It allows the vehicle to move slowly with maximum torque at the wheels.

NOTICE
Use the low speed range to pull a trailer, carry heavy cargo, go over obstacles or drive uphill and downhill.

SECONDARY CONTROLS

Some vehicle safety labels are not shown in the illustrations.

For information on vehicle safety labels, refer to *Important On-Product Labels*.

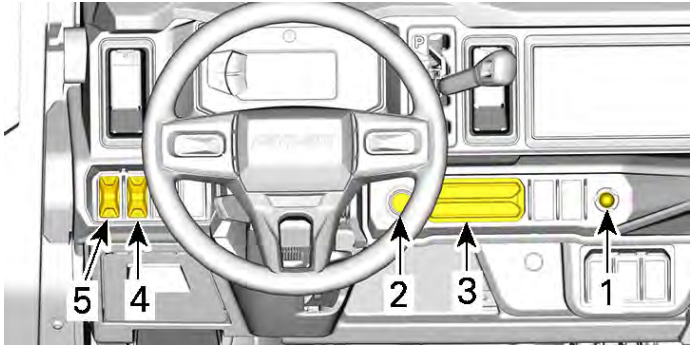

Models without CAB

1. D.E.S.S. Post
2. Start / Stop Button
3. Keypad
4. Winch
5. Headlight

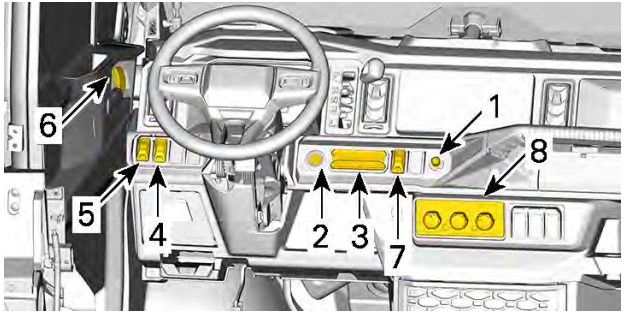

Models with CAB

1. D.E.S.S. Post
2. Start / Stop Button
3. Keypad
4. Winch
5. Headlight
6. Power Window
7. Volume (if equipped)
8. Climate Control

RF D.E.S.S Key and RF D.E.S.S. Post

RF D.E.S.S. Post

The D.E.S.S. post is located in the center of the dashboard, at the right of the steering wheel.

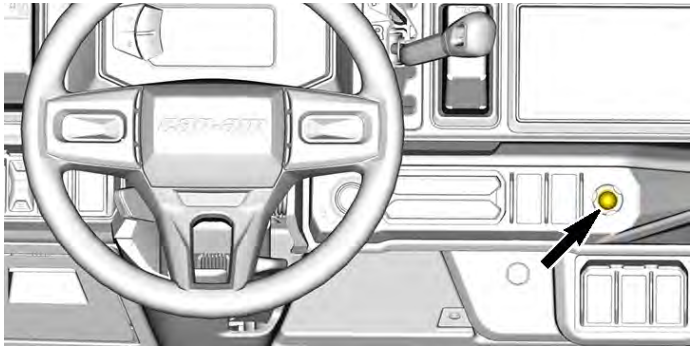

RF D.E.S.S. Key

For all D.E.S.S. related option, see an authorized Can-Am dealer for information.

Digitally Encoded Security System (D.E.S.S.)

This vehicle is delivered with 1 D.E.S.S. key.

The ignition keys contain an electronic circuit that gives it a unique electronic serial number.

The D. E. S. S. system reads the key code and allows engine starting for keys it recognizes.

This vehicle can be operated using different types of key programming: Refer to your dealer for complete information.

NOTE

Additional keys are available from your dealer as an accessory.

WARNING

Rollovers, tipovers, collisions and loss of control resulting in serious injury or death are possible with the performance or normal key. Using the normal key is not a substitute for the operator being prepared, qualified, and operating with care.

D.E.S.S. Flexibility

The D. E. S. S system of the vehicle can be programmed to recognize up to 8 different keys.

In this case, if you are the owner of many vehicles using a D.E.S. S. key, it is possible to use any of them with this vehicle.

Refer to your authorized Can-Am dealer to program the other D. E.S.S. keys.

ENGINE START/STOP BUTTON

The Engine Start/Stop button is located in the center of the dashboard, below the shifter lever.

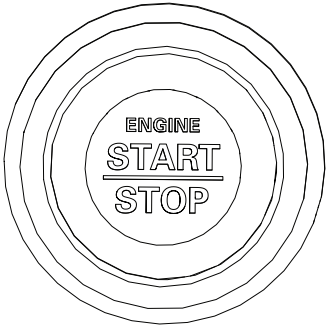

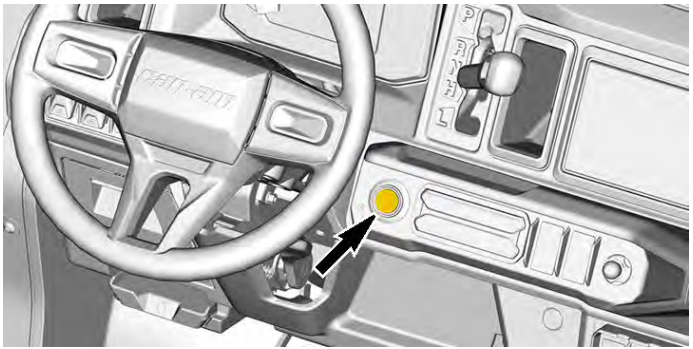

With the D.E.S.S. key inserted, press and hold the Engine Start/ Stop button to start the engine.

Press the same button to stop the engine,

To power up the electrical system without starting the engine, press briefly the Engine Start/Stop button.

KEYPAD

The keypad is located in the middle of the dashboard, on the right of the steering wheel.

The first click will show the current setting.

To change a setting, click again until the desired mode is reached.

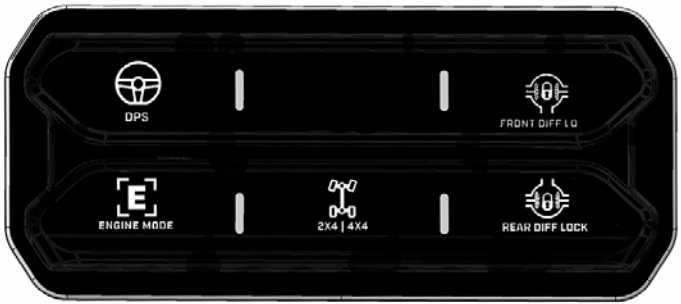

Icon	Use	Application
DPS	Switch between different power steering levels*	• Min • Med • Max
DIFF LOCK	Activate or deactivate the front differential lock	• Lock • Unlock
E ENGINE MODE	Switch between different engine modes*	• Normal • Sport • Work
2X4 | 4X4	Switch between 2x4 and 4x4 modes*	• 2WD • 4WD (previous selected differential mode)
REAR DIFF LOCK	Activate or deactivate the rear differential lock*	• Unlock • Lock
* Refer to *Tune Your Ride* for more information.		

CLIMATE CONTROLS

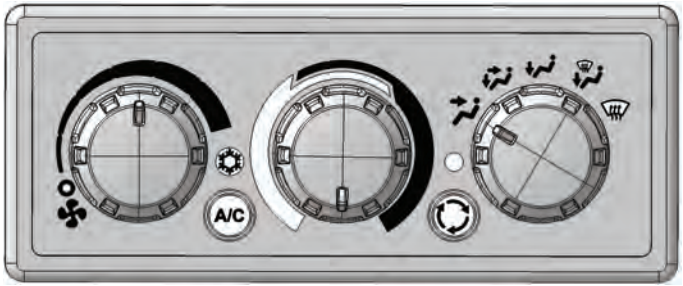

The climate control unit is located below the center of the dashboard.

The three knobs control the fan speed, the temperature and the air distribution in the cabin.

The A/C button is used to turn ON or OFF the A/C.

When the button is illuminated, the air recirculation is turned ON.

Refer to Climate Control System, page 3-44 for operation instructions.

HEADLIGHT DIMMER SWITCH

The headlight dimmer switch is located on the left-hand side of the dashboard.

This switch is used to select either the low or high beams for the headlights.

Press and hold the lower button to turn the headlights off. Press the same button again to turn the headlights back on.

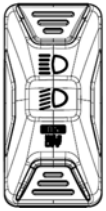

When equipped, the Signature lights stay ON even if the headlights are turn OFF.

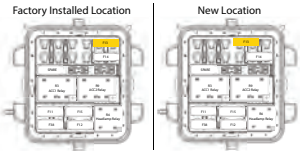

By moving the fuse 13 from pin A1/A2 to A2/A3, the Signature lights will be managed by the switch with all other lights.

WINCH SWITCH

The winch can be controlled from inside and outside the vehicle with the winch control switch located in the dashboard, at the left of the steering wheel.

Refer to your *Winch Guide* included with your vehicle for proper winch operation.

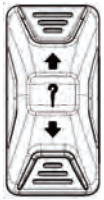

VOLUME SWITCH (if equipped)

The volume control switch is located on the center dashboard.

Press the button + or - to change the output volume.

POWER WINDOW SWITCHES (If Equipped)

The power window switches are located on the front door panels.

Two switches on the driver side and one on the passenger side.

1. Press the switch DOWN to open the window.
2. Press the switch UP to close the window.

WIPER / WINDSHIELD WASHER SWITCH (if equipped)

The wiper / windshield washer switch is located overhead, to the left of the central mirror (if equipped).

This switch is used to select either the OFF, wipe or wash-and-wipe positions.

HORN SWITCH (on applicable models)

To activate the horn, press the switch.

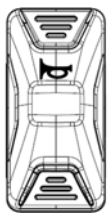

EQUIPMENT

Some features may not apply to your model or could be optional.

Some on-product labels are not shown on illustrations.

For information concerning the safety labels, refer to *Important On-Product Labels*.

CUP HOLDERS

⚠ CAUTION
Do not use cup holders while riding in rough conditions.

Two cup holders are located on the top of the dashboard.

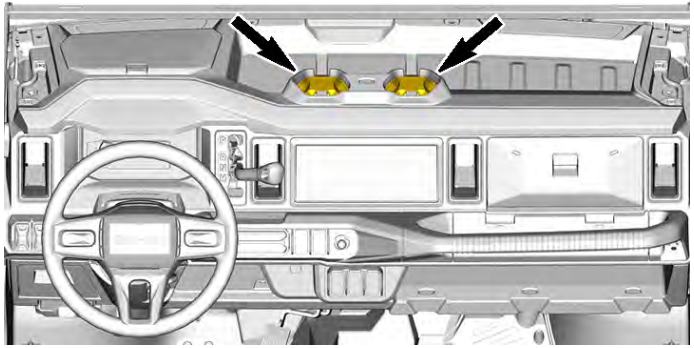

Two additional cup holders are available on the back of each central passenger seat backrest.

To access them, lower the central seat backrest.

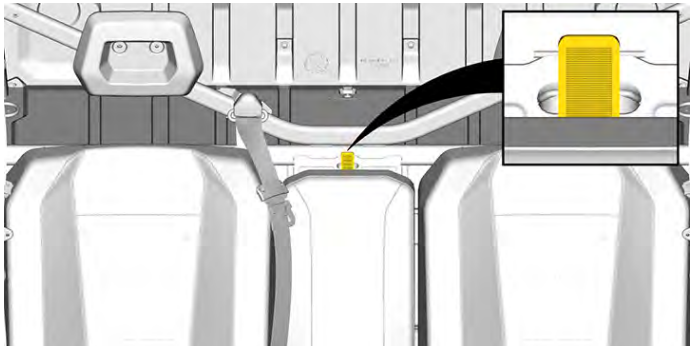

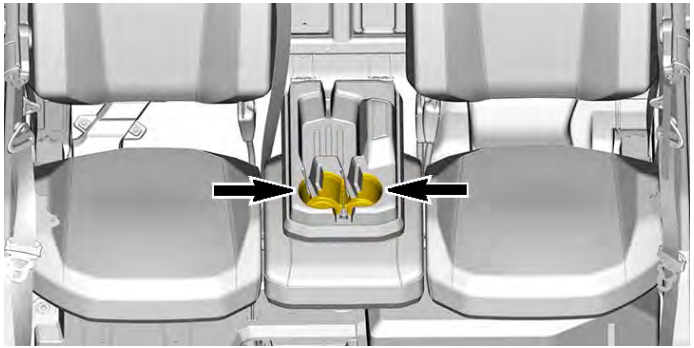

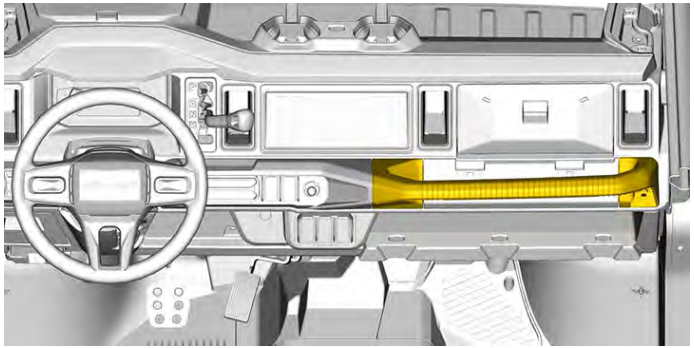

PASSENGERS HANDHOLD

WARNING

Never use any part of vehicle cage as handholds. Hands can be struck by objects outside the cockpit or crushed in a rollover.

Holding the handhold helps the passengers brace against the movement of the vehicle and helps keep hands and body inside the cockpit in the event of a rollover.

The front passengers have access to a front handhold located in front of their seats.

FRONT HOOD

Front Hood – Opening

1. Push both buttons.

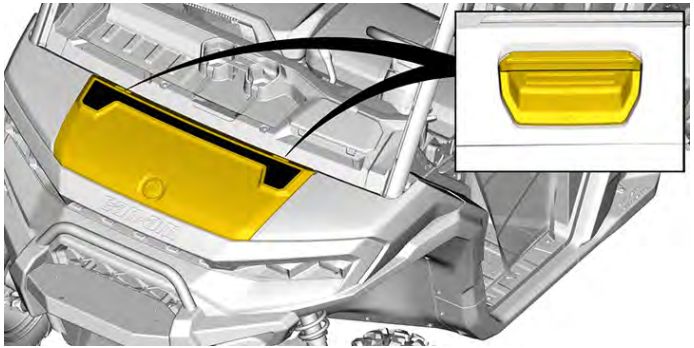

2. Lift the hood.

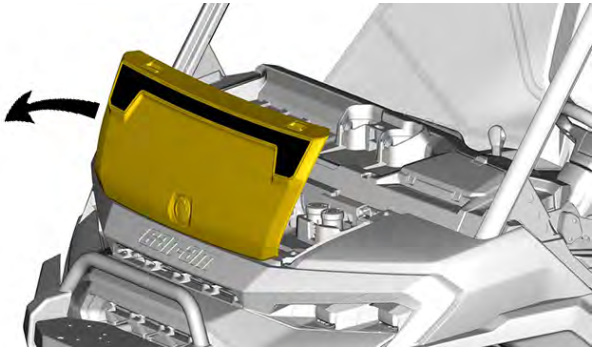

Front Hood – Closing

1. Lower the hood in place.

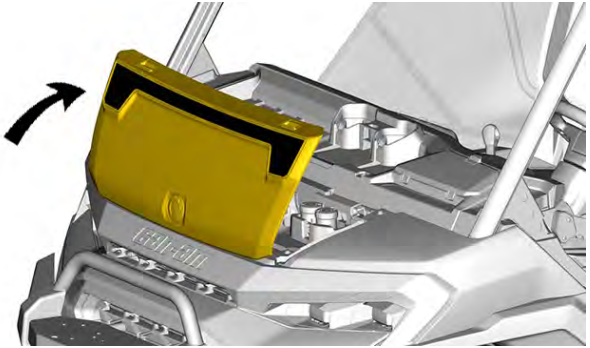

2. Close the front hood..

NOTICE
Ensure both latches are correctly secured. An audible click will be heard.

Front Hood – Removal

1. Open the hood until almost completely vertical.

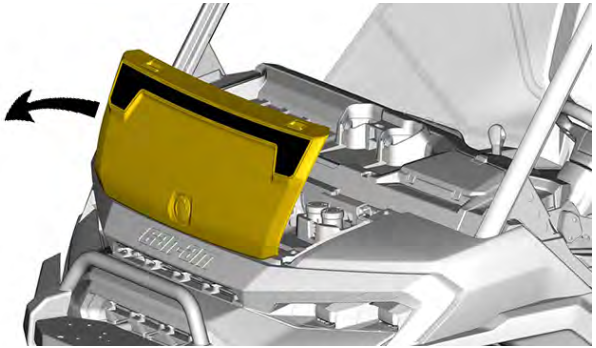

2. Pull up and rearward to remove.

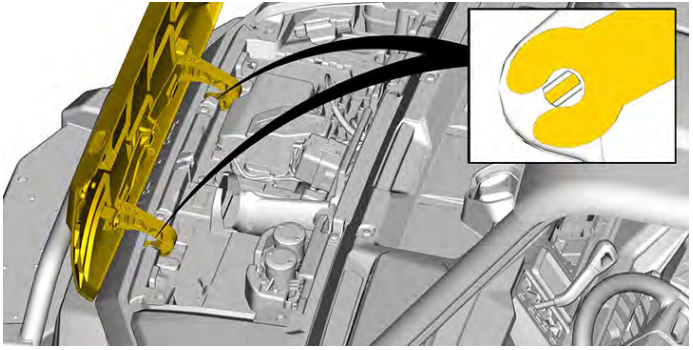

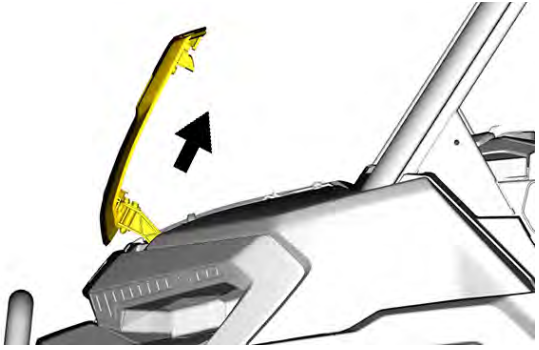

Front Hood – Installation

1. Lower the hood in place.

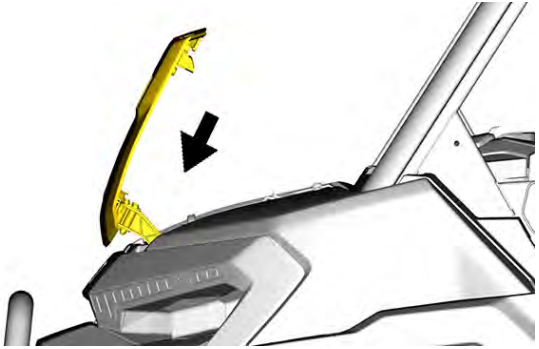

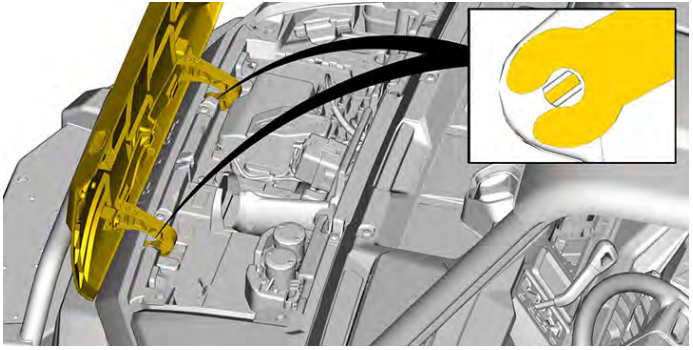

2. Close the hood.

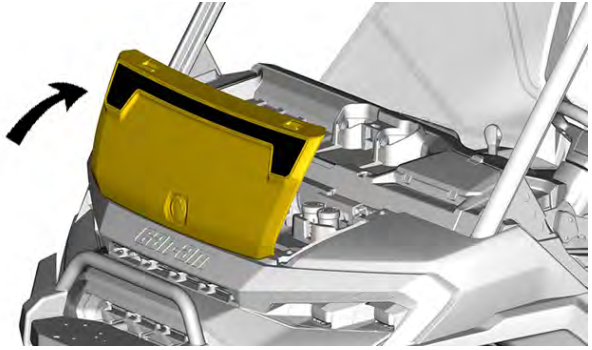

NOTICE

Ensure both latches are correctly secured. An audible click will be heard.

STORAGE COMPARTMENTS

This vehicle is equipped with multiple storage compartments designed to carry light objects.

Opened Storage Compartments

Multiple open storage compartments are available in the console.

⚠ WARNING

When riding vehicle, make sure no object stored in open storage compartments could cause harm in the event of a roll over.

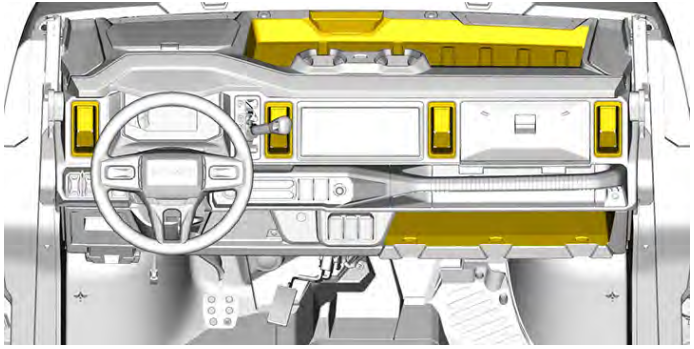

Models without HVAC

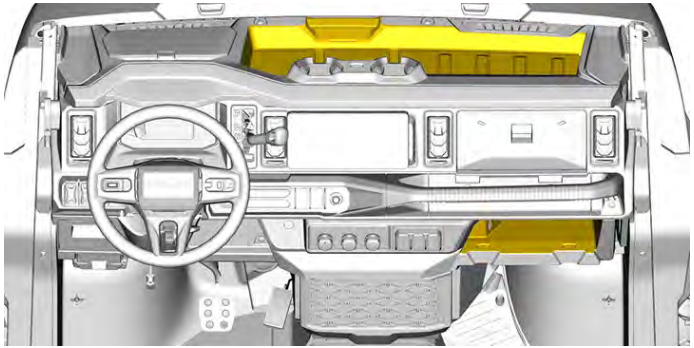

Models with HVAC

Multifunction Gauge Storage Compartment

A storage compartment is available above the multifunction gauge, including an USB-A connector.

NOTICE
This storage compartment can become hot during summer and also when using the vehicle at slow speed for a long period of time. Storing an electronic device like a cell phone is not recommended under these conditions because hot temperatures can cause permanent damage to the phone and its battery.

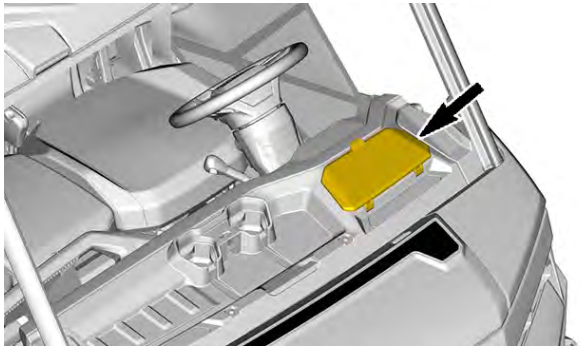

Smartphone Placeholder

Space especially design to transport a smartphone.

This space is located at the bottom left side of the lower dashboard, under the drive storage compartment.

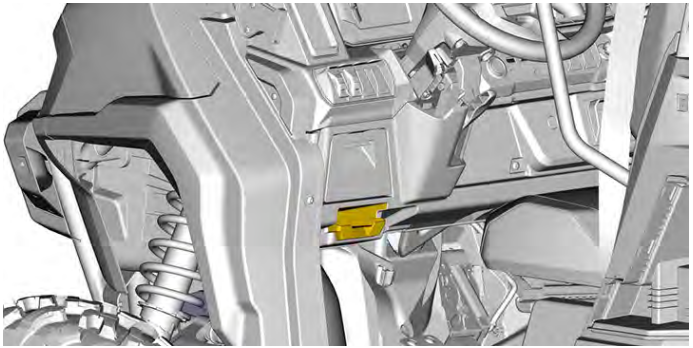

Driver Storage Compartment

A small closed storage compartment is available on the driver side.

Pull on the cover handle to open it.

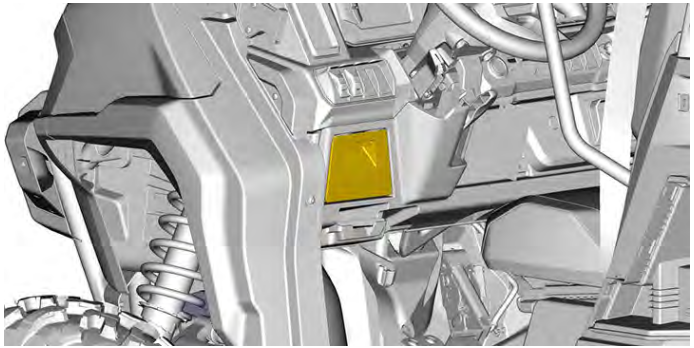

Glove Box

The vehicle is equipped with a closed glove box, which is intended to carry light objects.

NOTICE
This storage compartment can become hot during summer and also when using the vehicle at slow speed for a long period of time. Storing an electronic device like a cell phone is not recommended under these conditions because hot temperatures can cause permanent damage to the phone and its battery.

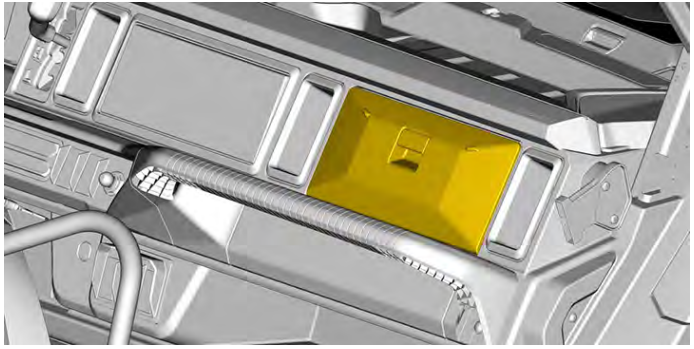

12-VOLT POWER OUTLET

The 12-volt power outlet is located inside the glove box.

Convenient for handheld spotlight or other portable equipment.

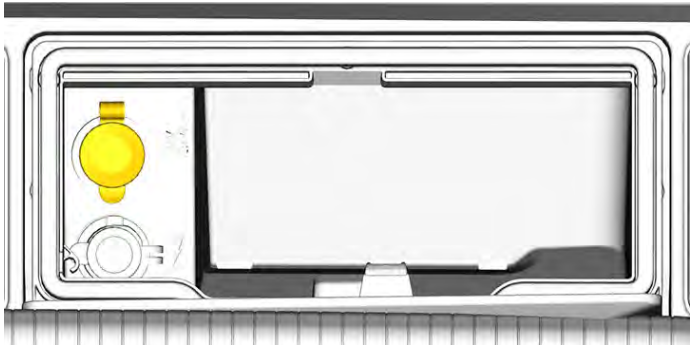

Remove the protective cap to use. Always reinstall it after use to protect against intrusion.

USB PORT

The USB port used for charging.

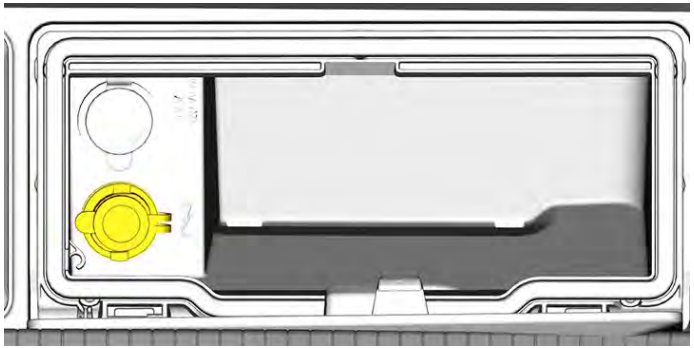

A USB cable extension can be installed from this compartment and used either in the center or side compartments (except HVAC models).

Dashboard Storage Compartment

This compartment is located under the glove box, behind the passenger handhold.

The operator's guide and the troubleshooting tools are located in this compartment.

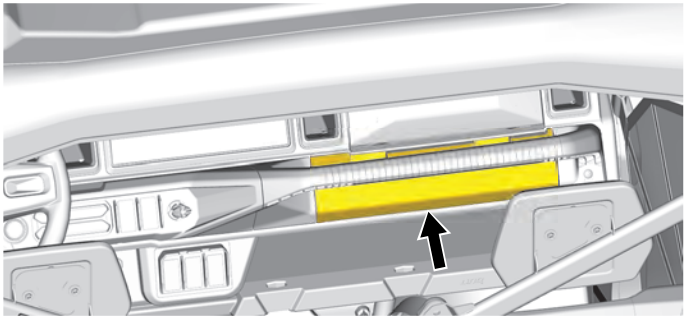

Under Seat Storage Box (if equipped)

A convenient removable under seat storage box is available.

To remove under seat storage box, lift RH passenger seat and remove under seat storage box by pulling it upwards.

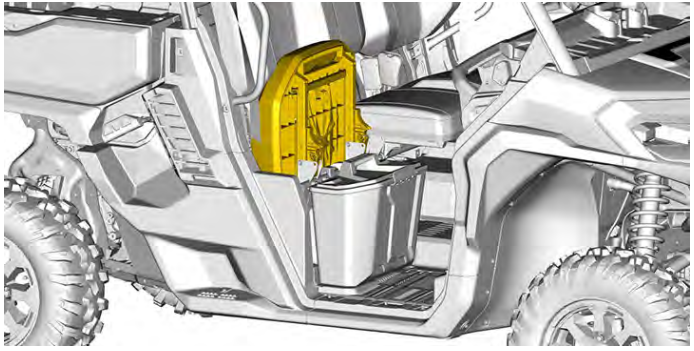

When reinstalling the storage box, make sure to align it properly with the floor emboss so it fits properly under the seat.

Seat Storage Box	
Maximum Capacity	6 kg (13 lb)

Central Passenger Backrest Storage Area

When central passenger seat backrest is pulled down a storage area is available.

NOTE
Always empty storage area before putting central passenger backrest up.

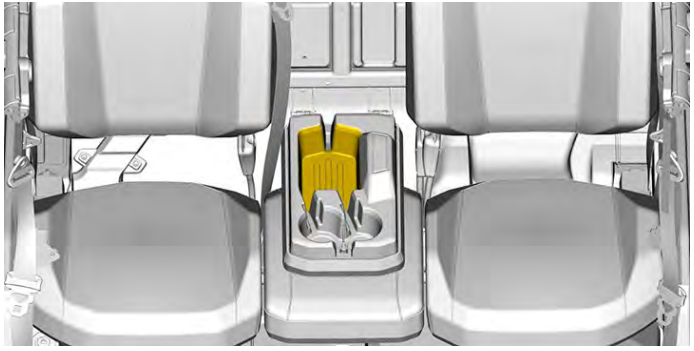

TROUBLESHOOTING TOOLS

The vehicle comes with basic troubleshooting tools to help you in some situations.

The tools are located in the dashboard storage compartment.

The following troubleshooting tools are included with the vehicle:

2-way screwdriver (flat and Phillips)	
Open-end wrench, 10/13 mm	
T30 Torx key	

RECOVERY POINTS

The vehicle is equipped with a front and a rear recovery points.

These recovery points must be only used to recover a stuck vehicle.

NOTICE
Recovery points are designed to recover a stuck vehicle only. They should not be used to carry a load or to attach a pulley or other mechanical device that can overload the attachment point. Doing so can cause damage to the vehicle frame.

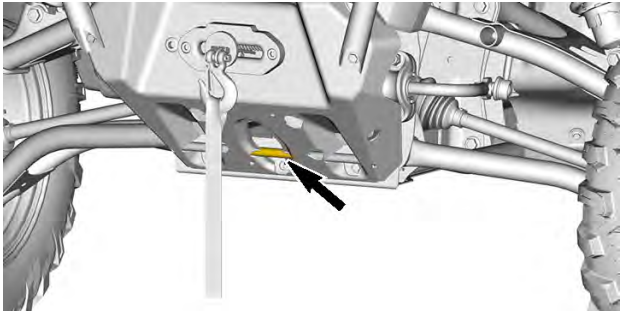

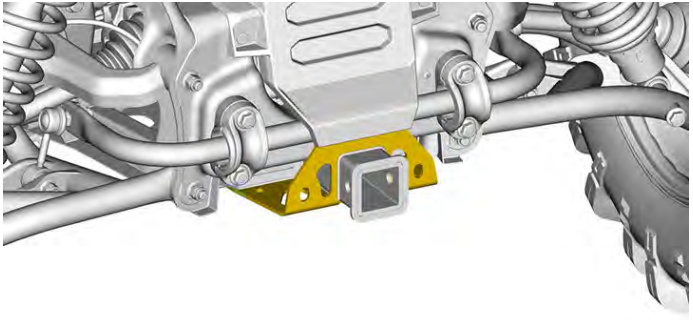

FOOTREST

The vehicle is equipped with driver and RH passenger footrests to allow firmly planting feet on vehicle floor, which helps to maintain proper body position while riding.

The footrests help minimize the risk of leg or foot injury when the appropriate footwear is used.

SIDE NETS (if equipped)

WARNING

Never operate the vehicle unless all side nets are in place and buckled.

A side net is provided on each side of the cockpit to help arms, legs or shoulders stay inside the vehicle, thus reducing the risk of injuries. Side nets may also keep bushes or other debris out of the cockpit.

Side nets are adjustable and must be kept as tight as possible.

To adjust side nets proceed as follows:

1. Secure side net with buckle.
2. Pull on all adjustment straps to tighten.

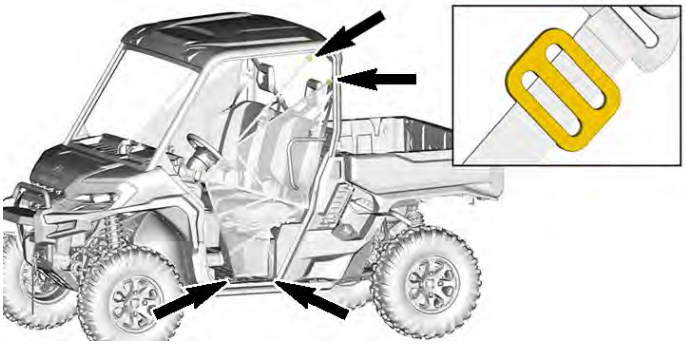

Typical

SHOULDER GUARDS (if equipped)

All vehicles equipped with side nets have also shoulder guards.

The shoulder guards help to restrain the entire body of driver and passengers inside the vehicle.

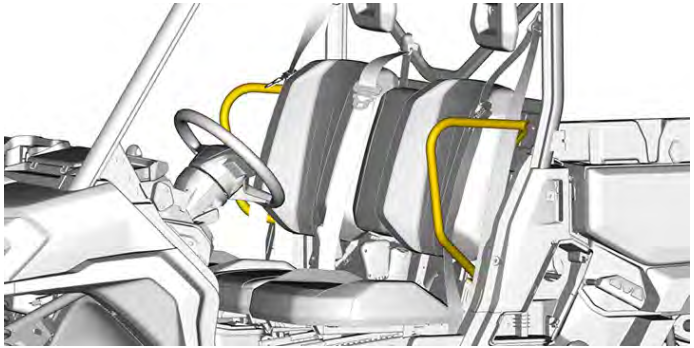

Typical

FULL DOORS (If equipped)

All vehicles with a cab come equipped with full doors, electric front windows and manual rear windows.

Doors can be removed from the vehicle.

⚠ WARNING
Always install safety nets and shoulder bars whenever removing doors from vehicle. See an authorized Can-Am dealer for removal and installation instructions.

To open the door, just pull on the door handles.

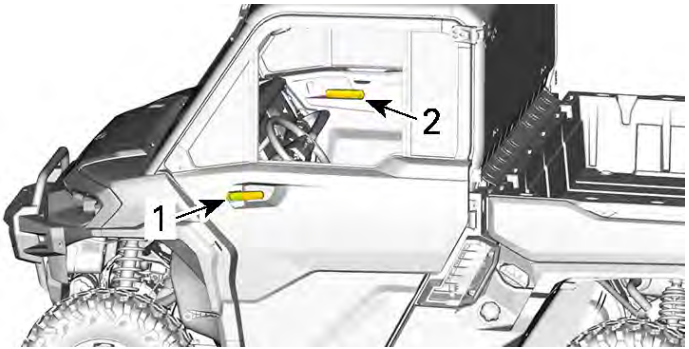

Typical

1. Outside door handle
2. Inside door handle

SEAT BELTS

This vehicle is equipped with 3 points seat belts to help protect driver and passenger in the event of a collision, rollover, or tipover. The seat belts can help keep occupants stay in the passenger compartment.

⚠ WARNING

Wear seat belts properly at all times.

Seat belts reduce the risk of injury in case of a crash and help to keep limbs inside the cockpit during a rollover or any accidents.

Before riding, everyone aboard should know how to unbuckle their seat belt rapidly. Knowing how to properly detach your seat belt is a crucial skill that can save your life in an emergency situation. In the event of an accident or vehicle malfunction, being able to quickly release your seat belt can help you escape the vehicle and avoid potential hazards such as fire or sinking. Additionally, knowing to quickly release your seat belt can also help you assist others such as children or older persons.

If driver's seat belt is not fastened when:

- The vehicle is ON but the engine is not started:
  - The seat belt indicator lamp will be turned ON.
  - The multifunction gauge will display the message: SEAT BELT.
- The engine is started and shift lever is moved out of PARK:
  - The vehicle speed will be limited to a maximum of approximately 25 km/h (16 mph) on flat ground.

⚠ WARNING

The vehicle may reach higher or lower speed depending on inclines.

⚠ WARNING

There is no indicator light or message for the passengers seat belt.

The driver is responsible for the passenger safety and should ensure the passengers buckle their seat belt.

Seat Belt – Fastening and Adjusting

The seat belt is equipped with a semi-cinching tab that locks the lap belt when the webbing is under tension.

Typical

1. Semi-cinching tab

To fasten the seat belt, insert the latch plate into the buckle, then pull the belt to ensure it is properly fastened.

Adjust the seat belt tightly against your body by pulling the shoulder belt upwards.

typical

⚠ WARNING

Wear seat belt properly.

Fasten seat belts and confirm that they latch and unlatch securely and tightened against the body.

Make sure it is not twisted or defective.

To release the seat belt, push on the red button on the seat belt buckle.

DRIVER'S SEAT

The driver seat can be adjusted forward and backward to meet the driver needs.

It is however important for the person driving the vehicle to be able to use and reach all controls adequately.

For example, the accelerator pedal and brake pedal should be easily accessible, workable and go all the way through its function activation.

WARNING
Controls should be properly and fully accessible to the driver at all times.

WARNING
Never adjust the seat position while driving.

Driver's Seat – Adjustment

1. Move the adjustment lever to unlock the seat.

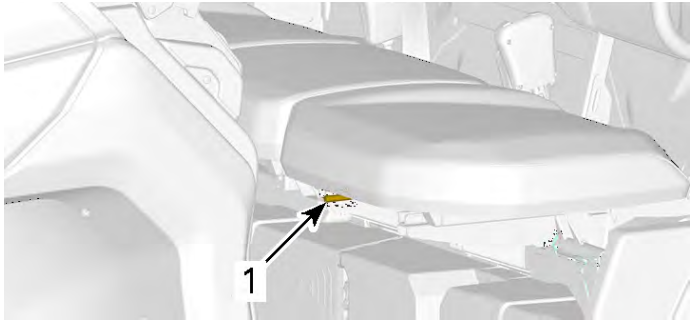

1. Adjustment lever

2. Move the seat front or rear to reach the desired position.
3. Release the lever to lock the seat into desired position.
4. Try to move the seat to be sure it is properly locked.

PASSENGER SEATS

The passenger seats are not adjustable.

The central passenger seat backrest can be tilted forward for access to cup holders by releasing the latch located on top of the backrest.

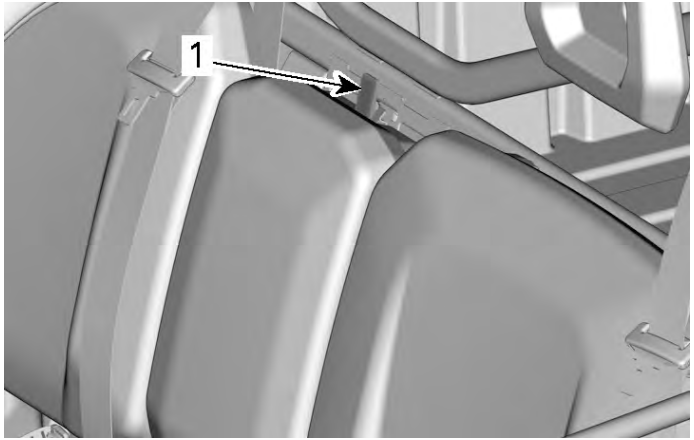

Typical

1. Backrest clip locking mechanism

The front passenger seats can be lifted to allow full access to the floor or to reach the under seat storage box under the right passenger seat.

To lift seat, pull on front of seat to unclip it and lift until it "clips" in the upper position.

FUEL RESERVOIR CAP

The fuel reservoir cap is located on the driver side, just below the cargo box release handle.

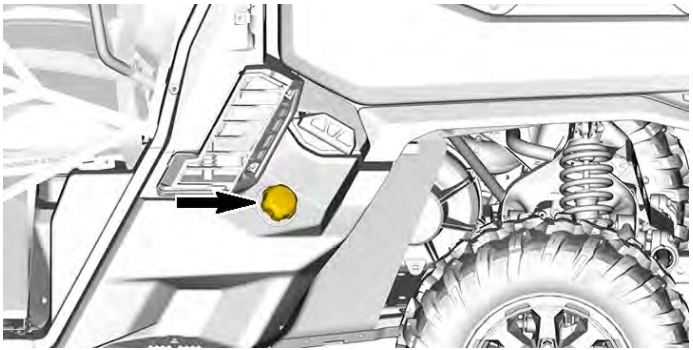

Refer to Fuel, page 3-61 section for information on fueling procedure and fuel requirements.

WINCH

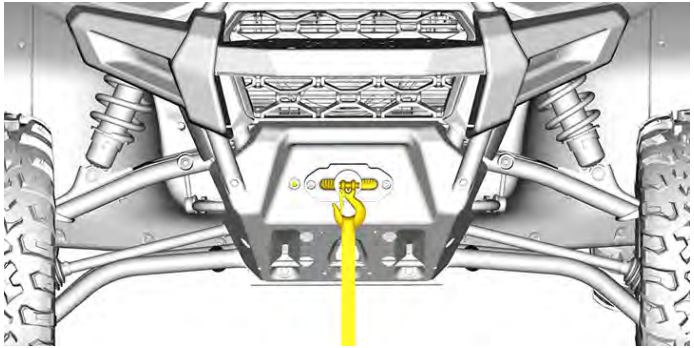

WARNING

To avoid severe injury or death or important components damages.

- Never use the winch cable/rope to retain a vehicle during trailering.
- Never ride with the winch cable/rope attached to a load or another vehicle.
- Only use the winch to help a stuck vehicle (snow, mud, etc.).
- Always refer to the winch manufacturer's instruction before pulling loads.

Refer to your winch guide included with your vehicle for proper winch operation.

Some vehicles have a winch with the auto stop feature. This feature stop the winch at end of the pull to prevent over-winding and damage to the winch or the vehicle.

The winch can be actuated inside the vehicle using the winch control switch on the left-hand side of the dashboard.

NOTICE

Using the winch intensively over a long period of time may discharge the battery.

Intensive use of the winch may cause the circuit breakers to momentarily turn OFF. In such a case, wait a moment, then continue winching. The breakers automatically turn ON once they have cooled down. The circuit breakers are located next to the winch solenoid in the service center.

The following tips will help to reduce the risk of discharging the battery:

- Always unreel manually: Unlock the cable using the handle then pull on the hook strap to unreel.
- Let the engine run while winching. Do not stop the engine immediately after winching to let battery recharge.
- Also, when winching for more than 30 seconds, it is recommended to increase engine RPM in the range of 3000 RPM to increase charging power to the battery.
- If equipped, use the brake holding mechanism to hold the vehicle.

WARNING

Make sure vehicle is in NEUTRAL (N) or PARK (P) before increasing engine RPM.

INCLINABLE CARGO BOX

The inclinable cargo box may be used for various types of cargo.

WARNING

To reduce the risk of loss of control or loss of load, use the cargo box only in accordance with *Carrying Loads* in the *Safety Information* section.

WARNING

Always close the cargo box before moving the vehicle.

The cargo should never extend beyond the tailgate when it is open.

When this situation occurs, the center of gravity of the vehicle changes and the vehicle behavior is modified.

Cargo Box Tilt Release Handles

WARNING

- Always ensure no one is standing behind the cargo box before you actuate the release handle.
- The load weight may affect the operation of the cargo box tilting feature (tilting or lowering).
- Some accessories assembled on the cargo box may affect his behavior during the opening and closure. Always pay attention during this operation.

The latching mechanism of the cargo box can be actuated from either side of the vehicle through a release handle.

Grab the handle from underneath to lift it and avoid hitting your knuckles.

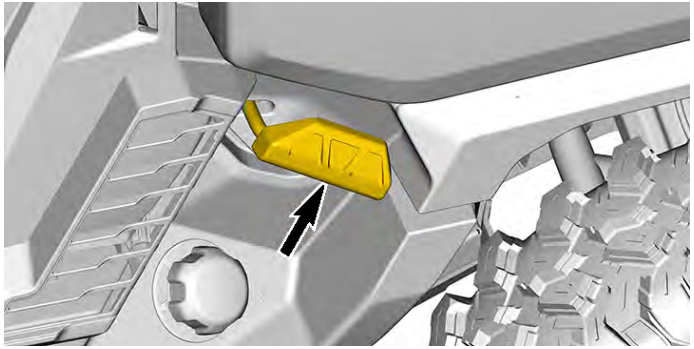

LH Side

To help opening the cargo box, press down on the corner of the cargo box while moving the release handle up.

Be very careful with the operation of the tailgate and the cargo box as the load may have moved during transport.

To lower the cargo box, simply push it down into place.

WARNING

- Keep yourself and others clear of the cargo box and vehicle frame junction when lowering cargo box.
- Ensure to properly latch the cargo box and the tailgate before riding.
- Make sure you do not leave objects between lifted cargo box and vehicle frame to ensure proper latching of the cargo box when lowered.

Tailgate

NOTICE

Do not exceed 113 kg (250 lb) of weight on the tailgate during loading or unloading. Always close tailgate before operating to reduce the risk of loss of load.

Tailgate – Opening

1. To open the tailgate, lift the tailgate handle.

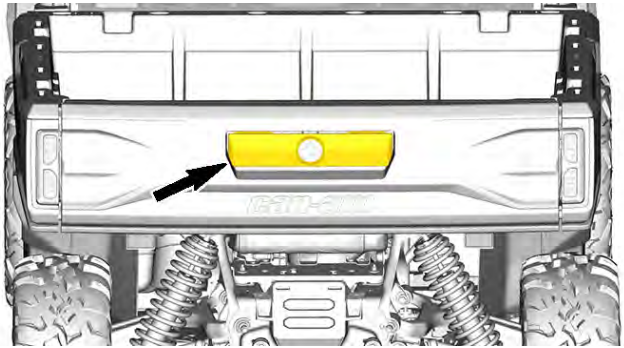

Tailgate – Removal

1. Open the tailgate.
2. Remove the plastic rivet and the clip on the LH side.

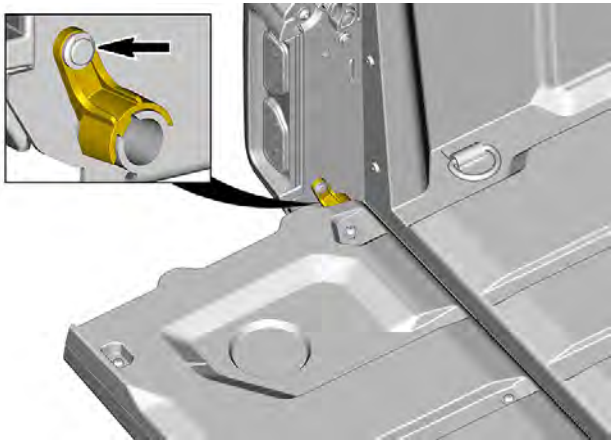

3. Gently pry the spring clip past the screw head on each side.

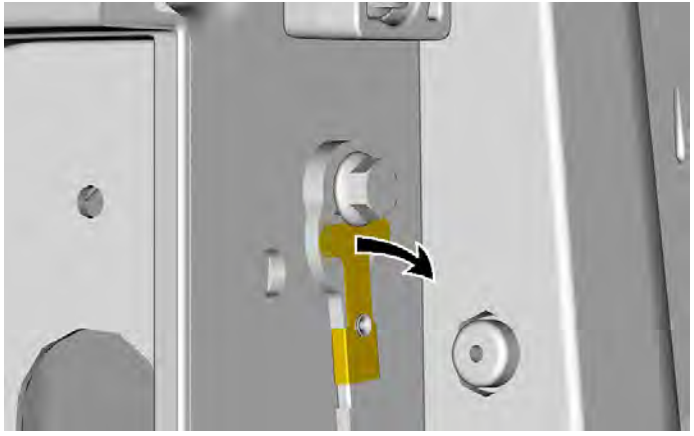

4. Lift the tailgate 45°.
5. Lift the LH side off it's hinge.
6. Remove the tailgate by sliding it to the left.
7. The installation is the reverse of the removal procedure.

Anchoring D-Hooks

In order to secure cargo inside the cargo box, 4 anchoring D-hooks are located on the cargo box floor.

NOTICE

NEVER try to lift the rear of the vehicle using these D-hooks.

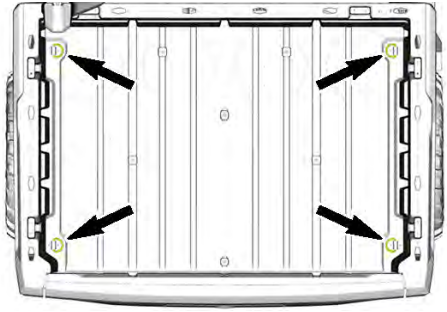

LinQ Attachment Points

Many LinQ attachment points have been positioned on the top of the cargo box walls to install BRP LinQ accessories.

NOTICE

Do not use these points to attach cargo inside cargo box, use the D-hooks.

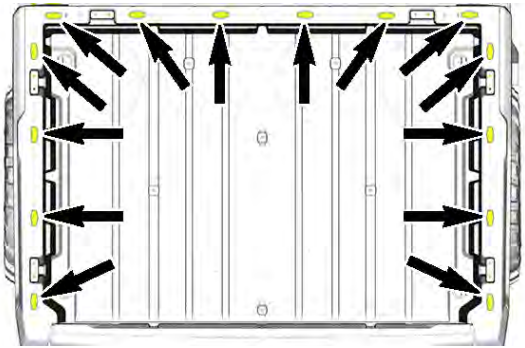

Cargo Box Separations

Cargo box can be easily separated into smaller storage compartments to prevent cargo loads from mixing or moving.

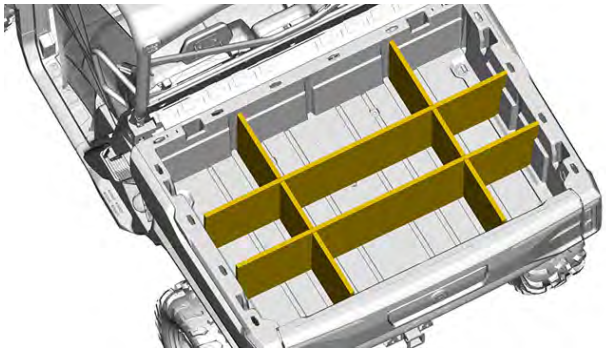

Example of cargo box separations

12V Power Outlet (if equipped)

Some models have a 12V power outlet located on the RH side of the cargo box.

TRAILER HITCH

The vehicle comes equipped with a 50.8 x 50.8 mm (2 x 2 in) standard receiver hitch.

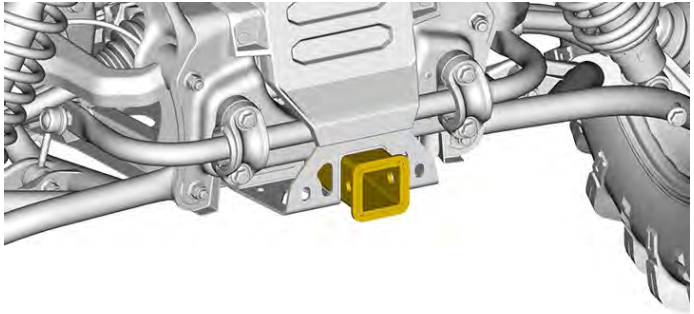

For the proper usage of the trailer hitch, refer to Moving Loads and Doing Work, page 2-25.

WARNING

To reduce the risk of loss of control or loss of load, always respect the maximum hauling capacity.

FRONT BUMPER

Steel bumper for additional front body protection.

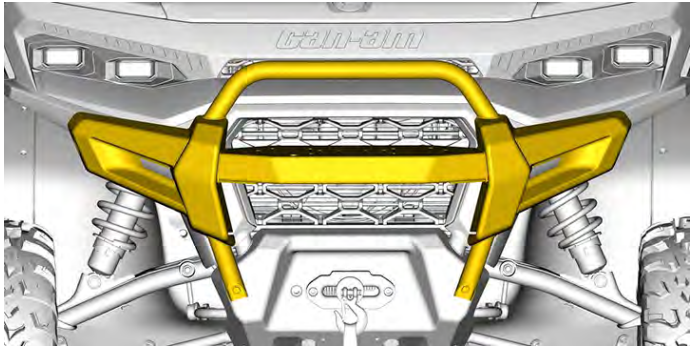

Typical – Limited Model Shown

BRAKE HOLDING MECHANISM

The brake holding mechanism lever is located under the dashboard, below the steering column.

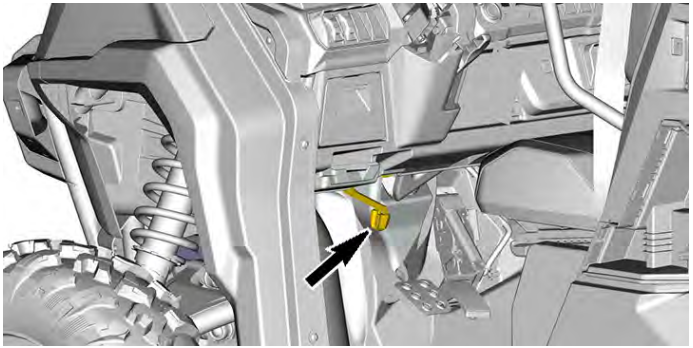

The brake holding mechanism function is to maintain brakes to all wheels while shift lever is set to Park.

To engage the brake holding mechanism, proceed as follow:

1. Immobilize vehicle,
2. Apply and hold the brakes,
3. Put shift lever in **Park**,
4. While holding the brakes, lift lever toward the steering wheel,
5. Remove foot from brake pedal, the pedal should stay lowered.

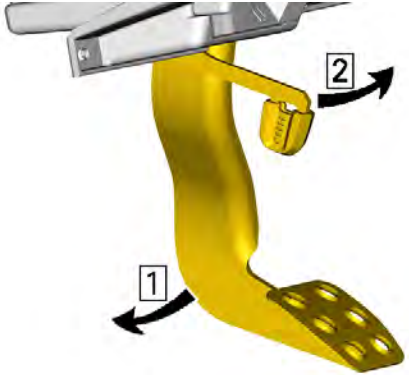

1. Apply and hold brake pedal
2. Lift lever

NOTE
The brake holding mechanism lever can be set to several positions.

WARNING
When the brake holding mechanism is applied, make sure the vehicle stays securely in place. ALWAYS put the shift lever in PARK when using the brake holding mechanism.

To release the brake holding mechanism, simply apply and hold the brake pedal, put shift lever in gear then release brake pedal. When released it should return to the rest position.

Safe usage of the brake holding mechanism requires the shift lever to be set to the Park position. It is not recommended to use the brake holding mechanism on its own.

WARNING
Make sure brake holding mechanism is released before operating the vehicle. If the brake holding mechanism is left ON while riding, it may cause damage to the brake system and lead to loss of braking capacity and/or fire.

WINDSHIELD WITH WIPER

All vehicles with CAB are equipped with a full glass windshield and a wiper.

To activate wiper, press the activation switch. The switch is located on the central panel at the top of the windshield.

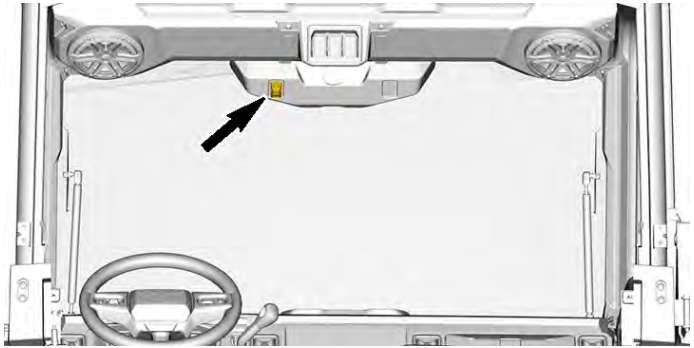

To activate windshield washer, hold activation switch up.

Full glass windshield with wiper can be removed from vehicle. See an authorized Can-Am dealer for information.

Windshield Position

Windshield can be set to 3 different positions.

- Closed
- Partially opened (second position on the handle)
- Fully opened (handle is released)

NOTE
When riding the vehicle with the windshield in one of the open position, adjust your speed to the terrain. The glass windshield is not as strong when not seated in its closed position.

To close the windshield, pull on the handle until it closes.

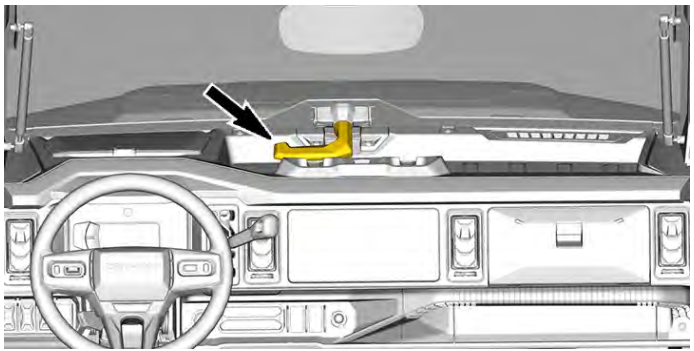

Windshield Washer – Filling up

1. Open the hood.

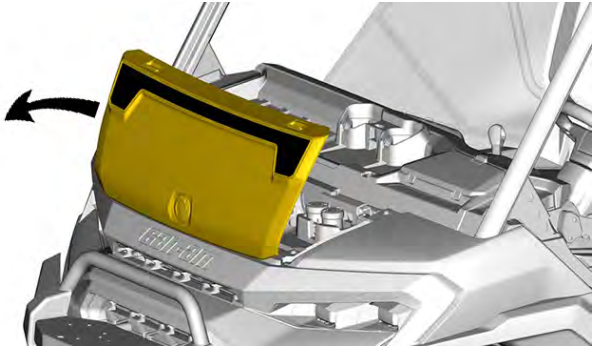

2. Open the washer fluid cap.

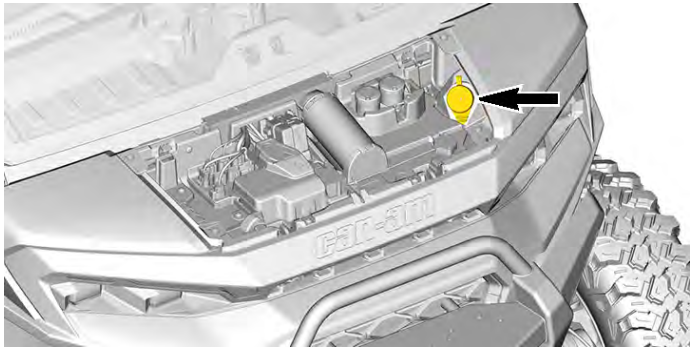

3. Add windshield washer fluid until full.

NOTICE
In areas where water freezes in winter, use an anti-freeze type windshield washer.

4. Close the washer fluid cap.
5. Close the hood.

CLIMATE CONTROL SYSTEM

Climate Control Panel

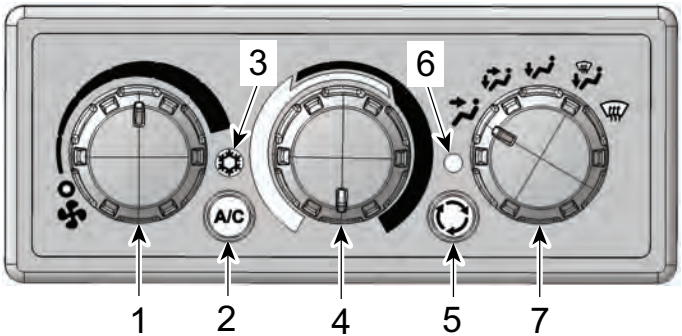

1. Fan speed control dial
2. Air conditioner ON/OFF button
3. A/C light activation
4. Temperature control dial
5. Air recirculation button
6. Air recirculation light activation
7. Air distribution dial

Airflow Mode Selection Dial

To select the airflow mode, turn the airflow mode selection dial.

On MAX models, the vehicles are equipped with rear outlets.

Regardless of the selected mode, the air flow is always directed through the rear outlet. The only way to interrupt the rear airflow is by closing the rear outlets manually.

Comfort

Instrument panel outlets and rear outlets (MAX models).

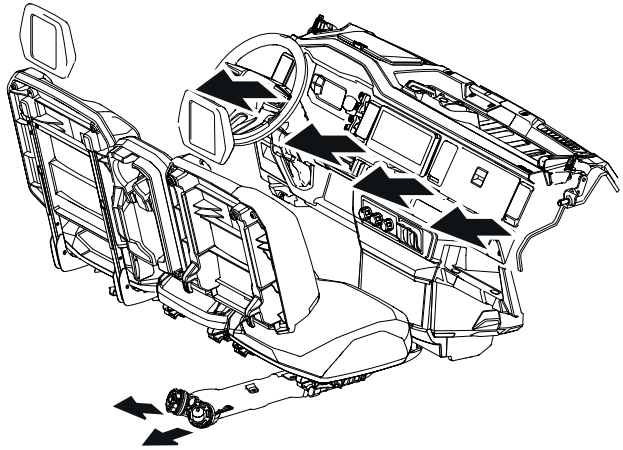

Bi-level

Instrument panel outlets, front foot outlets and rear outlet (MAX models).

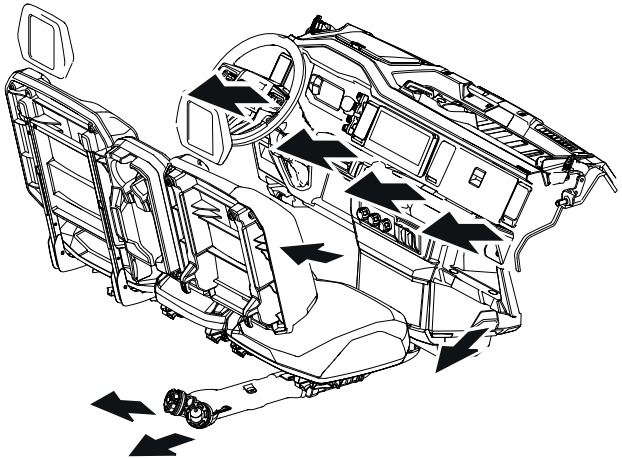

Foot

Foot outlets and rear outlets (MAX models).

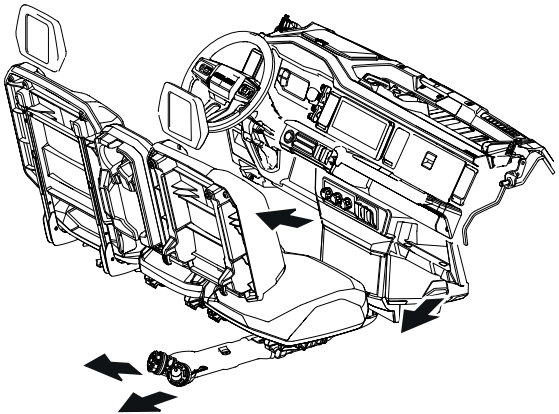

Foot-Def

Windshield defroster outlets, foot outlets, rear outlets (MAX models) and both side windows.

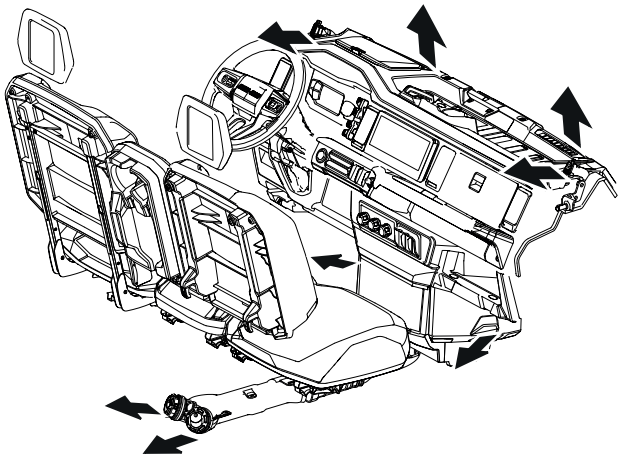

Defrost

Windshield defroster outlets, rear outlets (MAX models) and both side windows.

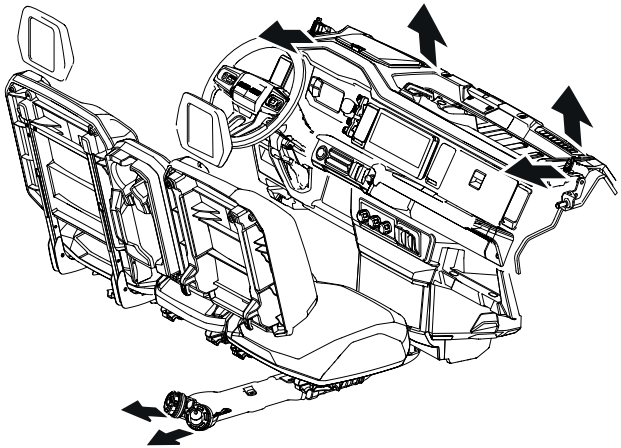

Ventilator Controls

Central Outlets

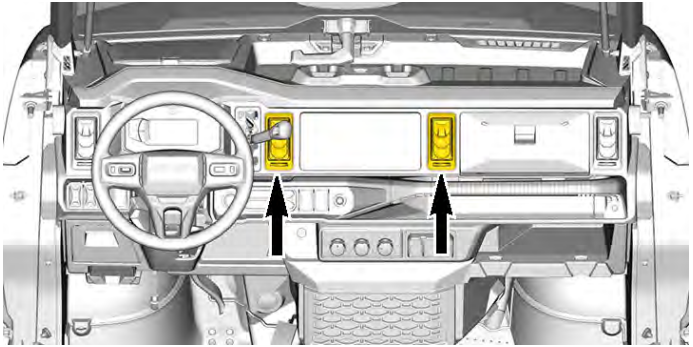

To adjust or close the airflow direction, move the tab.

Turn left to stop the airflow, right to allow the airflow.

Lateral Outlets

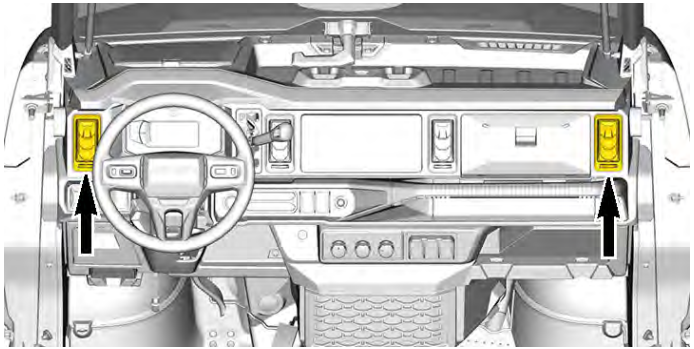

To adjust or close the airflow direction, move the tab.

Turn left to stop the airflow, right to allow the airflow.

Side Windows Outlets (CAB models only)

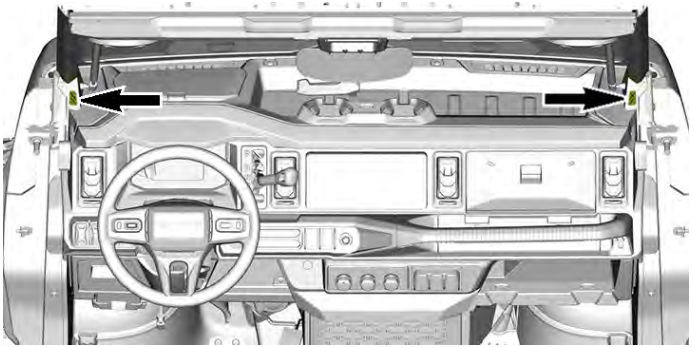

These outlets are not adjustable and cannot be closed.

Windshield Defroster outlets (CAB models only)

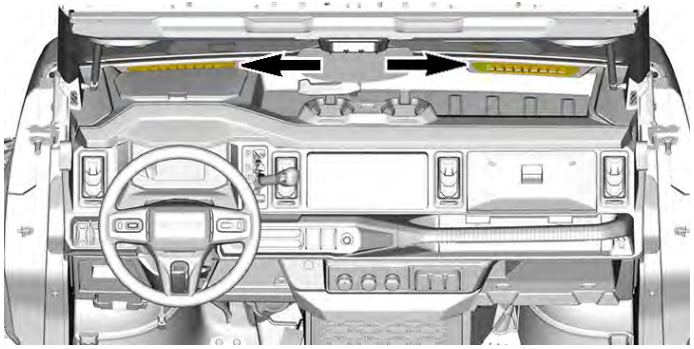

These outlets are not adjustable and cannot be closed.

Fan Speed Control Dial

The fan can operate even if the engine is not running. Install the DESS key and press briefly the Start/Stop button to wake up the electrical system.

Select the preferred fan speed by turning the fan speed control dial.

Air Conditioner ON/OFF Button

The air conditioner compressor operates only when the engine is running.

Press the air conditioner ON/OFF button A/C while the fan is in operation to turn on the air conditioner.

When the air conditioner is on, the “A/C” indicator light illuminates.

To turn off the air conditioner, press the button again.

NOTE
For efficient defogging or dehumidifying in cold weather, turn on the air conditioner. However, if the ambient temperature decreases to approximately 8 °C (46 °F), the air conditioner compressor will stop operating.

Temperature Control Dial

Turn the temperature control dial over a range from the blue side (cool) to red side (warm) to regulate the temperature of airflow from the air outlets.

Air Recirculation Button

Select the air recirculation by pressing the air recirculation button .

ON position (recirculation):

Interior air is recirculated inside the vehicle.

Press the air inlet selection button to the ON position for fast cooling with the air conditioner or when driving on a dusty road.

OFF position (outside air):

Filtered outside air is drawn into the passenger compartment.

Press the air recirculation button to the OFF position when the interior has cooled to a comfortable temperature and the road is no longer dusty.

WARNING

Continued operation in the ON position may fog up the windows.

Switch to the OFF position as soon as the outside conditions are no longer dusty.

Defrosting

Select the or mode by turning the airflow mode selection dial to defrost or to dehumidify the windshield and front door windows.

4.5” DIGITAL DISPLAY

MULTIFUNCTION DISPLAY

Lower Display

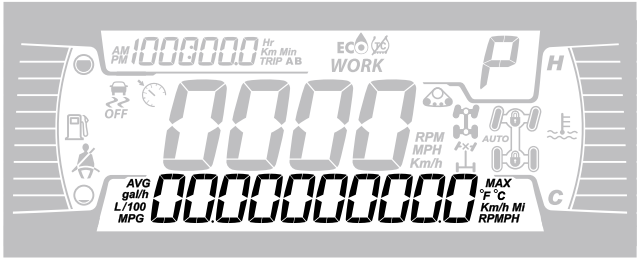

May display the following:

- RPM
- Speed statistics
- Engine Temperature
- Battery Voltage
- Settings
- Messages

Use LOWER button to change the displayed information.

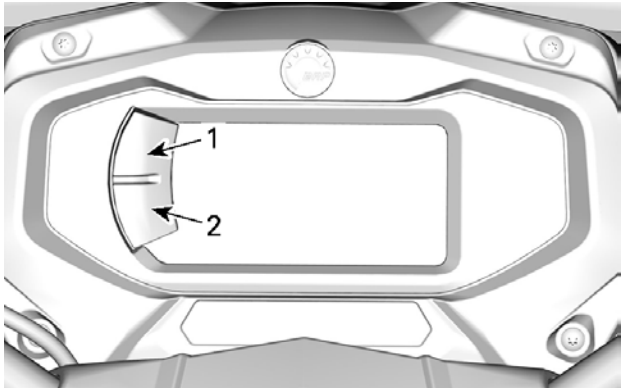

1. Upper button
2. Lower button

Left Lateral Display

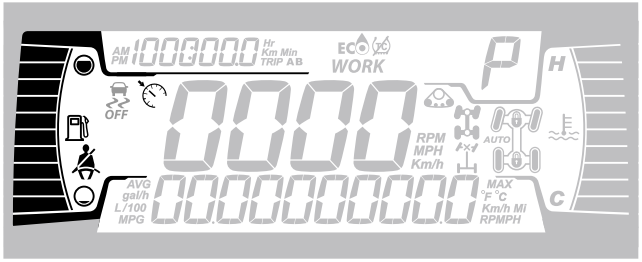

The left lateral display includes:

- Fuel level indicator
- Seat belt icon
- Speed Limiter (if equipped)

Right Lateral Display

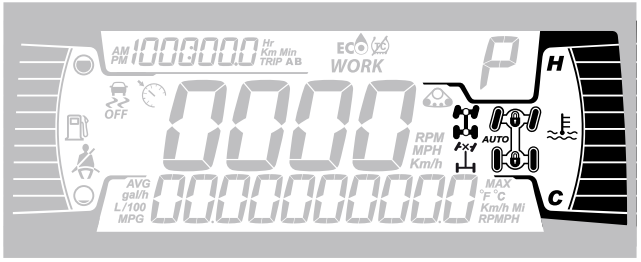

The right lateral display includes:

- Engine Temperature
- 2X4 / 4X4 / Front Diff Lock
- Rear diff lock
- Quick-4Lok

Central Display

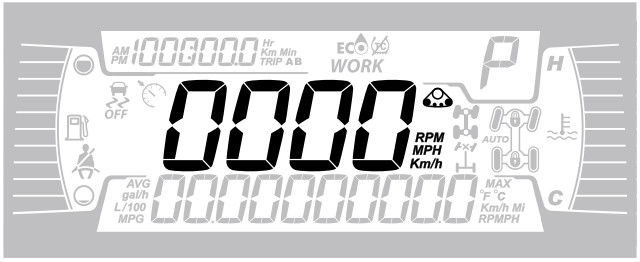

The central display includes:

- Vehicle speed in km/h or MPH or RPM.
- Track kit Active (if equipped)

Transmission Position Display

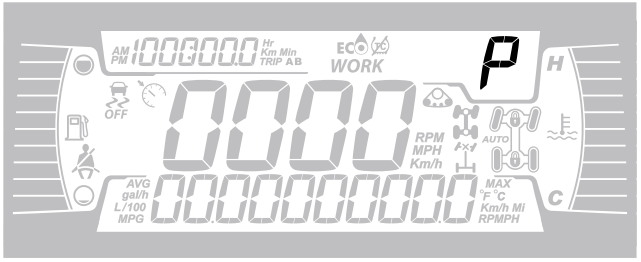

This display shows gear position of gearbox:

- P (Park)
- R (Reverse)
- N (Neutral)
- H (High Range)
- L (Low Range)
- – (Invalid Range)

Engine Mode Display

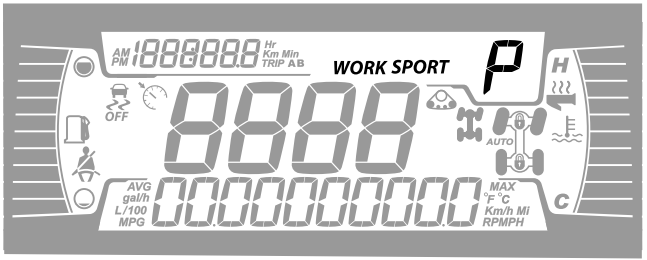

The engine mode display indicates the selected mode of operation:

To change between modes, press the ENGINE mode button on the keypad to cycle through available modes.

Engine Mode	*Message at Activation*
Normal	NORMAL MODE
Sport	SPORT MODE
Work	WORK MODE

Trip Display

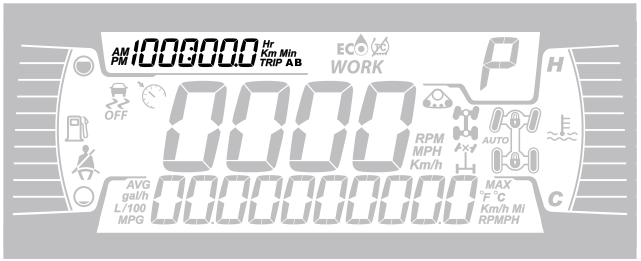

This display shows trip information:

- Cumulative distance odometer
- Trip A
- Trip B
- Vehicle hour meter
- Clock

Use UPPER button to change the displayed information.

Hold UPPER button to reset Trip A/B meters.

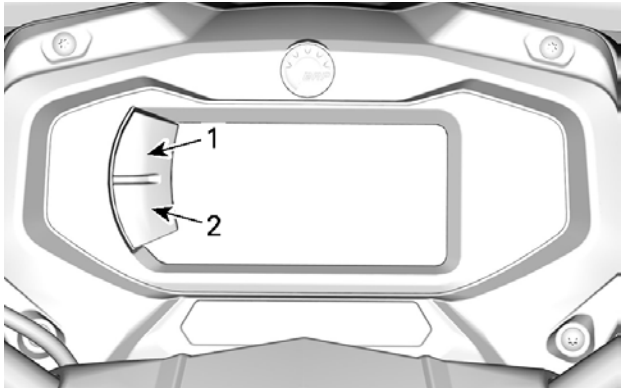

1. Upper button
2. Lower button

Indicator Lamps

Warning and Telltale Lights

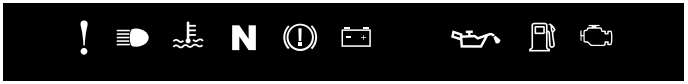

WARNING and Telltale Lights	
!	ORANGE - Vehicle Malfunction
	BLUE - High Beam
	RED - The engine temperature is too high.
N	GREEN - Neutral
	RED - Brake lock lever is engaged or malfunction of the brake system
	RED - The battery voltage too low or problem with the electrical system

WARNING and Telltale Lights	
	RED - Low oil pressure Normally ON when engine is OFF
	ORANGE - Low fuel level
	ORANGE **Turn on**: Malfunction of the vehicle emissions control system **Blink**: Engine problems, the limp home mode is activated. Have the vehicle serviced immediately.

Icons and Indicators

Icons and Indicators	
WORK	Denotes WORK mode is selected.
SPORT	• Denotes SPORT mode is selected.
	When lit, seat belt not buckled with vehicle immobilized. Flashing when vehicle is moving.
	Track kit active (If Equipped)
	• Denote front differential lock is activated. When this option is available.
	• Denotes Utility Speed Limiter is selected. • When this option is available.

SETTINGS

The buttons to navigate through menus are located on the left side of the LCD display.

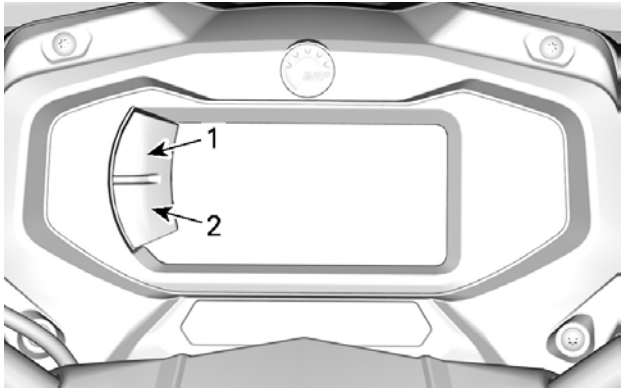

1. Upper button
2. Lower button

Setup

1. Using LOWER button, select **SETTINGS** and hold to enter setting menu.

Maintenance Reset

NOTE
Only when the maintenance icon is displayed.

1. Using LOWER button, select **RES MAINT** and hold to reset maintenance.

Fault Codes

Available only when at least one code is activated.

1. Using LOWER button, select **CODES** and hold to see actives fault codes. Fault codes will be scrolled on the Lower Display.

Reset Stats

1. Using LOWER button, select **RESET STAT** and hold to reset.

Unit Selection

This multifunction gauge is factory preset in Imperial units but it is possible to change it to Metric units.

1. Using LOWER button, select **UNITS** and hold button to change units.

Setting Clock

All of the following action must be performed using the LOWER button.

1. Select **CLOCK** and hold to adjust clock.
2. Press the button to select clock display.
3. Push and hold the button for 1 second.
4. Press the button to select 12:00 AM PM or 24:00 time base.
5. Push and hold the button to acknowledge selection.
6. Press the button to change hours (hours flash).
7. Push and hold the button to acknowledge hour selection.
8. Press the button to switch to minutes (minutes flash).
9. Push and hold the button to acknowledge minutes selection.

Setting Language

The gauge display language can be changed.

Refer to an authorized Can-Am dealer for language availability and to setup the gauge to your preference.

Setting Brightness

The brightness of the LCD display can be adjusted.

1. Using LOWER button, select **BRIGHTNESS** and hold button to change brightness.
2. Using LOWER button, adjust brightness then push and hold the button to acknowledge selection.

Utility Speed Limiter Mode (if available)

Speed limiter mode allows the operator to set the desired maximum speed.

This is useful when the operator wants to keep a desired speed for work on a land, in the field and/or with or without a trailer.

For a normal use of this function, use the engine mode WORK and the LOW gear, especially with a trailer.

NOTE

This function can be used in other engine modes than WORK and/or in HIGH gear but the function is for a utility purpose at first. For a constant low speed during prolonged periods, refer to Correct Range (Low or High), page 3-65.

The operator must keep the throttle depressed to maintain forward speed.

Once the maximum speed is set, the operator can vary the from stopped to the set speed using the throttle.

The set speed will be exceeded when the throttle is fully depressed, at that time, the speed limiter will be temporarily deactivated (the icon will be blinking) until the vehicle speed is under or equal the speed limiter's set point.

As you proceed under a constant speed setting, keep your attention level up to maintain good situational awareness.

Slowing down is a matter of releasing the throttle.

Activating Utility Speed Limiter Mode

1. Go into the **SETTINGS** menu.
2. Select **SPEED LIM**, then you will have a choice of:

Unit selection	Information displayed
Metric (km/h)	• - - (Unlimited) • From 8 km/h to 30 km/h by step of 2 km/h.
Imperial (MPH)	• - - (Unlimited) • From 5 MPH to 20 MPH by step of 1 MPH.

3. Hold menu button to confirm selected utility speed limit.

The utility speed limiter indicator will turn on.

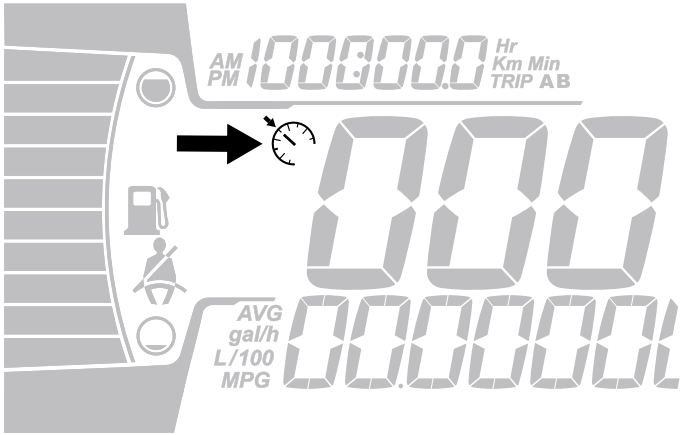

Activating utility speed limiter mode of operation only limits the maximum speed available when depressing the throttle.

The throttle must be held in to maintain forward speed.

Speed can be varied from idle up to the set speed using the throttle once the speed limiter function is activated.

Deactivating Utility Speed Limiter Mode

1. To deactivate utility speed limiter mode, in **SETTINGS**, select **SPEED LIM** and then select the – (unlimited) limit.

REFUELING

Fuel – Requirements

NOTICE
Always use fresh gasoline. Gasoline will oxidize; the result is loss of octane, volatile compounds, and the production of gum and varnish deposits which can damage the fuel system.

Alcohol fuel blending varies by country and region. Your vehicle has been designed to operate using the recommended fuels, however, be aware of the following:

- Use of fuel containing alcohol above the percentage specified by government regulations is not recommended and can result in the following problems in the fuel system components:
  - Starting and operating difficulties.
  - Deterioration of rubber or plastic parts.
  - Corrosion of metal parts.
  - Damage to internal engine parts.
- Inspect frequently for the presence of fuel leaks or other fuel system abnormalities if you suspect the presence of alcohol in gasoline exceeds the current government regulations.
- Alcohol blended fuels attract and hold moisture which may lead to fuel phase separation and can result in engine performance problems or engine damage.

Fuel - Recommended Octane Rating

The engine can run using the regular unleaded gasoline but for optimal performance the Premium unleaded gasoline is recommended.

Minimum Octane rating	North America	87 AKI (R+M)/2
	Outside North America	91 RON
Recommend-ed Octane rating	North America	91 AKI (R+M)/2
	Outside North America	95 RON

Use unleaded gasoline containing MAXIMUM 10% ethanol.

E10	

NOTICE

Never experiment with other fuels. Engine or fuel system damages may occur with the use of an inadequate fuel.

NOTICE

Do NOT use fuel from fuel pumps labeled E85.

Use of fuel labeled E15 is prohibited by U.S. EPA Regulations.

Fuel – Vehicle Fueling Procedure

⚠ WARNING

- Fuel is flammable and explosive under certain conditions.
- Never use an open flame to check fuel level.
- Never smoke or allow flame or spark in vicinity.
- Always work in a well-ventilated area.
- Vehicle must be on a level surface to perform fueling.

1. Place the vehicle on a level surface.
2. Move the shift lever into PARK position.
3. Stop the engine.

⚠ WARNING

Always stop engine before refueling.

4. Have the occupants get out of the vehicle.

WARNING

Do not allow anyone to remain in the vehicle while fueling. If there is a fire or explosion during fueling, a vehicle occupant could be unable to quickly leave the area.

5. Slowly unscrew the fuel reservoir cap counterclockwise to remove it.

WARNING

If a differential pressure condition is noticed (whistling sound heard when loosening fuel reservoir cap) have vehicle inspected and/or repaired before further operation.

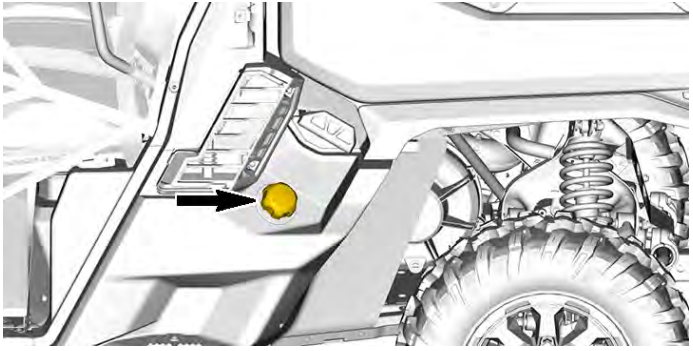

6. Insert the spout into the filler neck.
7. Pour fuel slowly so that air can escape from the tank and prevent fuel flow back. Be careful not to spill fuel.
8. Stop filling when the fuel reaches the bottom of filler neck. **Do not overfill.**

WARNING

Never top up the fuel tank before placing the vehicle in a warm area. As temperature increases, fuel expands and may overflow.

9. Fully tighten the fuel reservoir cap clockwise until you hear a clicking noise.

NOTICE

Always wipe off any fuel spillage from the vehicle.

BREAK-IN PERIOD

Operation During Break-In

A break-in period of 10 operating hours or 300 km (200 mi) is required for the vehicle.

Engine

During the break-in period:

- Avoid full throttle operation.
- Avoid pressing accelerator pedal more than 3/4 of the stroke.
- Avoid sustained accelerations.
- Avoid prolonged cruising speeds.
- Avoid engine overheating.

However, brief accelerations and speed variations contribute to a good break-in.

Brakes

WARNING

New brakes will not operate at their maximum efficiency until their break-in is completed. Braking performance may be reduced, so use extra caution.

Apply moderate braking force for the 40 to 50 first braking events.

Belt

A new belt requires a break in period of 50 km (30 mi).

During the break-in period:

- Avoid strong acceleration and deceleration.
- Avoid pulling a load.
- Avoid high speed cruising.

BASIC PROCEDURES

Engine – Starting

1. Ensure shift lever is set to PARK (P) or (N) NEUTRAL and press the brake pedal.
2. Install the D.E.S.S. key on the D.E.S.S. post.
3. Press the Start/Stop button until the engine starts.

Do not press the accelerator pedal. If the accelerator pedal is pressed at least 95%, the engine will not start.

NOTICE
If engine does not start after a few seconds, do not hold the start position more than 10 seconds. Refer to *Troubleshooting*.

Shift Lever – Operation

NOTICE
When changing gear selection, always completely stop the vehicle and apply the brakes prior to shifting. Damage to the gearbox may occur.

1. Apply brakes and select the desired shift lever position.
2. Release brakes.

Correct Range Selection (Low or High)

It is important to limit situations known to make the drive belt slip excessively. The main reason the drive belt will slip is if the gearbox is in high range when it should be in low range.

Pay attention to the following:

Low Range

Low range should be used whenever:

- Pulling
- Pushing
- Hauling a load
- 4x4 applications
- Mud holes
- Water holes
- Crossing obstacles
- Climbing onto trailer
- Hill climbing

It is also recommended to use low range if driving for prolonged periods at speeds under 24 km/h (15 mph).

Please refer to Break-in Period, page 3-64 for drive belt break-in information.

High Range

High is the default riding range.

Electronic Drive Belt Protection (if available and activated on your model)

Some vehicles have the electronic drive belt protection function activated. Refer to your authorized Can-Am dealer for availability and possible activation.

This function is activated when riding at too slow speed for the **High Range** instead of use the **Low Range**

In this situation the electronic drive belt protection will help protect the CVT drive belt from being damaged by activating the engine torque limiter. The gauge will also scroll a LOW GEAR message, suggesting the operator to immobilize the vehicle and set to LOW GEAR.

Whenever the electronic drive belt protection is activated, you **MUST** shift in LOW range.

Parking the Vehicle and Stopping the Engine

⚠ WARNING

Avoid parking on steep slope as the vehicle may roll away.

Always put the vehicle in PARK when stopped or parked to prevent rolling.

Avoid parking in places where hot parts can start a fire.

1. Select the flattest terrain available for parking.

2. Release accelerator pedal and use brakes to completely stop the vehicle.
3. While engine still running, get shift lever in PARK position. When in Park, the rear differential will lock automatically.

WARNING

When stopped or parked always bring shift lever to park position.

This is especially important when parking on a slope.

On very steep inclines or if the vehicle is carrying a cargo, the wheels should be blocked using rocks or bricks.

4. Press the Start/Stop button until engine turns OFF.
5. Remove the D.E.S.S. key from the D.E.S.S. post.

Drive Belt Durability - Tips for Maximizing

Riding style and conditions have a direct impact on drive belt durability.

This vehicle features a CVT system design that is optimized to offer the best performance.

The CVT and drive belt have successfully endured thousands of miles of durability tests.

However, to maximize drive belt durability and to prevent premature failures, it is important that the operator understands the limits of a belt driven CVT system and adapts their riding style and speed accordingly.

Never hold the accelerator fully depress for more than five (5) minutes when riding in the following conditions:

- High ambient temperatures (above 30 °C (86 °F))
- Heavy loads: Passengers / Heavy cargo
- Heavy drag: Soft sand / Hill climbing / Mud / Using a track kit.

Make sure to select the appropriate range, refer to Shift Lever–Operation, page 3-65.

SPECIAL PROCEDURES

Component failures resulting from these events are not covered by warranty.

Fuel Flooded Engine – Drowned Mode

If the engine does not start and it is fuel-flooded, the drowned mode can be activated to prevent fuel injection and to cut ignition while cranking. Proceed as follows:

1. Move shift lever in park position.
2. Install the D.E.S.S. key on the D.E.S.S. post.
3. Press completely and HOLD accelerator pedal.
4. Press the Start/Stop button and hold it for 10 seconds.
5. Release the Start/Stop button.
6. Release accelerator pedal completely.
7. Press the Start/Stop button again to allow normal engine starting.

If it does not work:

1. Remove the spark plugs, refer to Spark Plugs – Removal, page 4-64 in Maintenance Procedures, page 4-64 .
2. Crank engine several times.
3. Install new spark plugs if possible or clean and dry spark plugs.

If engine does not start, see an authorized Can-Am Off-road dealer, a repair shop, or a person of your own choosing for maintenance, repair, or replacement.

Please refer to the US EPA EMISSION - RELATED WARRANTY, page 8-9 contained herein for information about warranty claims.

CVT – Water Intrusion

If water is present in the CVT, the engine will accelerate but the vehicle will remain still.

1. Place the vehicle on a level surface.
2. Stop the engine as soon as possible.
3. Tilt the cargo box.

4. Remove the LH rear deflector by removing the following fasteners.

NOTE
This step is not required but can be proceed to create more room to work.

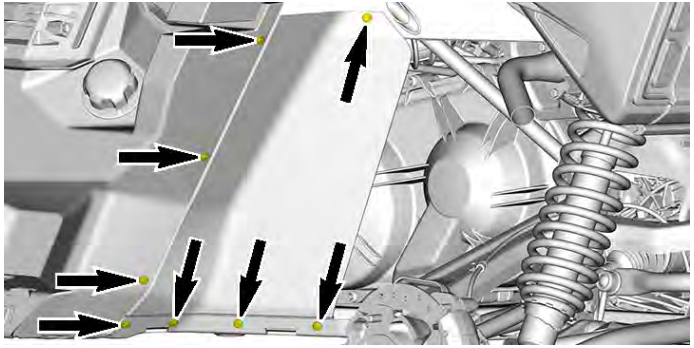

5. Drain the CVT housing by removing the CVT drain plug.

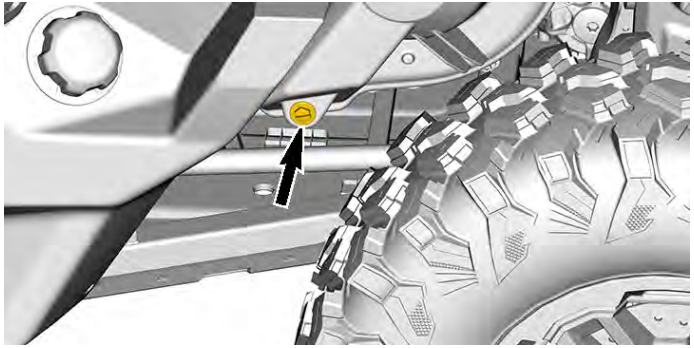

6. Reinstall all removed parts and have the CVT inspected and cleaned by an authorized Can-Am dealer, a repair shop or person of your choosing.

Battery – Drained Out

If the battery is dead or too weak to crank the engine, it can be jump started.

WARNING
Connect the jumper cables as specified in the jump start procedure.

1. Park the booster vehicle close to the front of your vehicle.
2. Open the front hood.
3. Remove the booster post cover.
4. Begin by connecting one end of the RED jumper lead to the positive (+) post of the discharged battery.

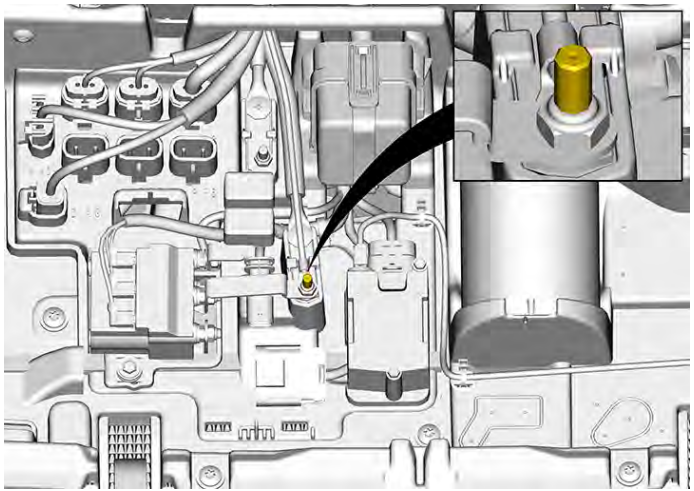

5. Then connect the other end of the RED jumper lead to the positive (+) post of the booster vehicle's battery.
6. Connect one end of the BLACK jumper lead to the negative (-) post of the discharged battery.

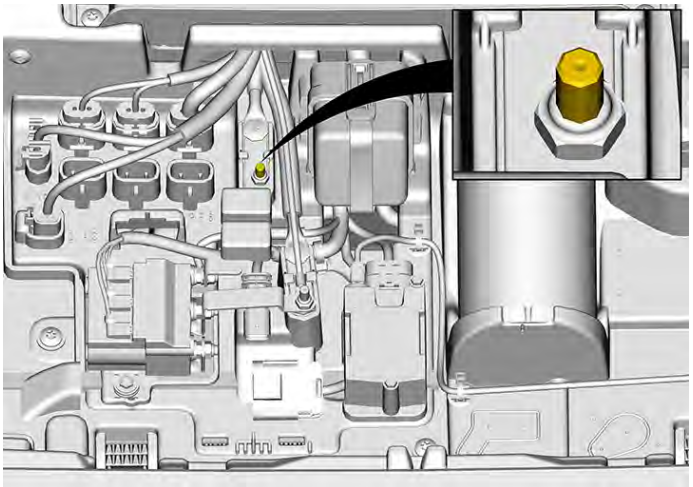

7. Connect the other end of the BLACK jumper lead to the negative (-) post of the booster vehicle's battery.
8. Start the booster vehicle and let it run to idle.

9. Start your vehicle in the usual way. If the engine does not start, wait a few minutes before repeating the attempt in order to protect the starter motor and the booster battery.

If it still does not start, there might be a problem with the starting system.

Have the vehicle transported (see Transporting the Vehicle, page 3-76) and repaired by an authorized Cam-Am dealer.

10. Once the vehicle has been started, let both vehicles run at idle for a few minutes before disconnecting the jumper cables.

11. Remove the jumper cables in the reverse order that they were connected.

If the engine stops shortly after it has been started or when the jumper cables are disconnected, there might be a problem with the charging system. Have the vehicle transported (see Transporting the Vehicle, page 3-76) and repaired by an authorized Cam-Am dealer.

12. Fully recharge the battery with a battery charger or have it recharged by an authorized Cam-Am dealer or a qualified service station as soon as possible.

13. After recharging the battery, have the vehicle inspected by an authorized Can-Am dealer.

Vehicle - Rollover

Abrupt maneuvers, sharp turns, side hilling or accident may cause vehicle to rollover.

NEVER START THE ENGINE!

1. Should the vehicle be rolled over, it will be necessary to have it transported to an authorized Can-Am dealer for inspection as soon as possible.

2. Inspect at minimum the following points:

- Cage and its attachment points
- Steering system
- Suspension and its attachment points.
- Air filter box and air filter for contamination
- All fluid levels
- Seat belts, including retractors, buckles and semi-cinching tabs

3. Repair or replace parts before driving the vehicle again.

Vehicle – Immersion

NEVER START THE ENGINE!

NOTICE
Never start the engine as immersion of the vehicle can cause serious damage to the engine if the correct restart procedure is not followed.

1. Have the vehicle transported to an authorized Can-Am dealer as soon as possible.

TUNE YOUR RIDE

Suspension – Adjustment Guidelines

⚠ WARNING

Suspension adjustment could affect vehicle handling. Always take time to familiarize yourself with the vehicle's behavior after any suspension adjustment has been made.

The vehicle handling and comfort depend upon suspension adjustments.

Choice of suspension adjustments vary with vehicle load, personal preference, riding speed and terrain condition.

The best way to set up the suspension, is to start from factory settings, then customize each adjustment one at a time.

Front and rear adjustments are interrelated. It may be necessary to readjust the rear shock absorbers after adjusting front shock absorbers for instance.

Test run the vehicle under the same conditions; trail, speed, load, etc. Change one adjustment and retest. Proceed methodically until you are satisfied.

Suspension – Factory Settings

Factory settings are suitable for almost all conditions.

Take into consideration that an increase in ground clearance can affect the handling of the vehicle.

Front Suspension

Spring Preload
Cam position 1 (soft)

Rear Suspension

Spring Preload
Cam position 1 (soft)

Suspension – Adjustment

Spring Preload – Adjustment

Following are guidelines to fine-tune suspension.

The spring preload affects the ground clearance of the vehicle.

Shorten the spring for a firmer ride and rough riding condition or when pulling a load or trailer.

Lengthen the spring for a softer ride and smooth riding condition.

NOTE
Factory settings are suitable for almost all conditions. Take into consideration that an increase in ground clearance can affect the handling of the vehicle.

WARNING
The left and right shock adjustment on front or rear suspension must always be set to the same position. Never adjust one shock only. Uneven adjustment can cause poor handling and loss of stability, which could lead to an accident.

1. Lift the vehicle to adjust spring preload.
2. Using a suspension adjustment tool, turn the adjusting cam adjust the spring preload.

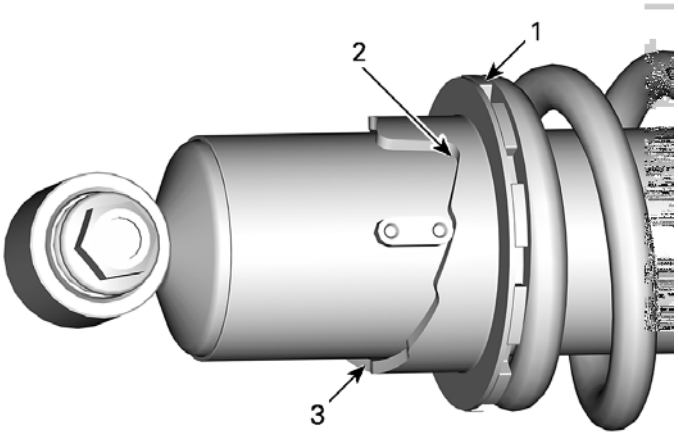

1. Turn adjusting cam
2. Soft adjustment
3. Firm adjustment

Dynamic Power Steering (DPS) Assist Level Adjustment

The tri-mode Dynamic Power Steering (DPS) offers easy steering assistance to the rider. The level of assistance will automatically adapt according to the vehicle's speed and rider's demand, in order to provide maximum steering power at lower speed where the demand is normally higher. As speed increases, the assistance is progressively reduced to keep maximum steering feel and precision to the rider.

It is possible to choose between three modes of assistance: Minimum, Medium and Maximum. Each mode will continue to automatically adapt to the vehicle's speed and rider's demand, so it does not require to be changed when riding. These modes are used to set the level of assistance to match each rider's preferences.

The following DPS modes are preset in the vehicle.

DPS MODE	
DPS MAX.	Maximum steering assist
DPS MED.	Medium steering assist
DPS MIN.	Minimum steering assist

To change the DPS mode, the electrical system must be wake up. The engine can runs or not.

If the engine is not running, the change will as soon the engine will run.

To change the DPS mode, press on the DPS button to select another mode. Repeat until the desired mode is activated.

TRANSPORTING THE VEHICLE

When contacting a towing or transporting service, be sure to ask if they have a flatbed trailer, loading ramp or power ramp to safely lift the vehicle and tie-down straps. Ensure the vehicle is properly transported as specified in this section.

NOTICE

Do not tow this vehicle — towing can seriously damage the vehicle's drive system.

NOTICE

Avoid using chains to tie the vehicle — they may damage the surface finish or plastic components.

WARNING

To avoid severe injury or death or important components damages.

- Never use the winch cable/rope to retain a vehicle during trailering.
- Never ride with the winch cable/rope attached to a load or another vehicle.
- Only use the winch to help a stuck vehicle (snow, mud, etc.).
- Always refer to the winch manufacturer's instruction before pulling loads.

WARNING

Always transport the vehicle facing forward to avoid damaging the windshield or other components. Parts may detach during transport.

WARNING

Make sure all accessories, cargo and loose objects inside the vehicle are properly secured, or remove it to prevent from failing on the road and creating a hazard for following vehicles.

WARNING

Before attempting to mount vehicle onto a platform or a trailer, make sure to respect the following safety precautions.

- Carrying equipment:

  The carrying item (platform or trailer or flat bed) must be of appropriate dimensions and capacity to safely support and transport the vehicle.

- Hauling vehicle

  Do not exceed vehicle hauling capacity and specifications. Ensure the trailer or platform is properly secured to the hauling vehicle hitch.

- Visibility

  Ensure you have a good visibility during the entire maneuver.

- Terrain

  The hauling vehicle and trailer must be on a leveled surface. Use wheel chocks on trailer and hauling vehicle to avoid any movement.

- Ramps

  Use ramps with proper rating and secure ramps to the trailer or platform. Avoid steep ramps.

- Bystanders

  Always make sure bystanders are not close to the vehicle or the trailering equipment while climbing up.

- Accessories and cargo

  Make sure all accessories, cargo and loose objects inside the vehicle are properly secured, or remove it to prevent from failing on the road and creating a hazard for following vehicles.

Using Vehicle Power to Climb Onto Trailering Equipment

When vehicle can climb on its own power, proceed as follows;

1. Wear protective gear.
2. Fasten seat belt.
3. Use low gear only.
4. Use 4WD.
5. Start from a sufficient distance from the trailer to align the vehicle in a straight line with the ramps. Never attempt to turn while getting closer to the ramp. Rear wheels might not be aligned once you get to the ramp and vehicle may fall off.
6. Slowly climb the front wheels onto the ramp to verify alignment.

7. Back off the vehicle, verify ramps are still secure, then proceed at proper speed.
8. Carefully drive vehicle onto platform or trailer. Use sufficient speed to climb without spinning or abruptly accelerating. Avoid acceleration while on ramps to prevent ramps movement.
9. If trailer is inclined towards front, simply let vehicle roll in without acceleration.
10. Once vehicle is climbed, put shift lever to Park. Apply brake locking mechanism (if equipped).

CAUTION

When vehicle cannot move on its own power, or in case overshooting is a risk or if any dangerous condition prevents for embarking on its own power, proceed using a winch.

Using a Winch to Pull Vehicle Onto Trailering Equipment

When vehicle cannot climb on its own power, proceed as follows;

WARNING

Have the help of an assistant. One person should be in vehicle to have access to vehicle steering, brakes and winch switch, while the other person controls the environment and safety of the maneuver.

WARNING

Ensure the winch hook can be safely attached to a proper anchoring point. Use proper rigging.

NOTE

If vehicle can be started safely, let engine idle during winching to avoid draining the battery.

1. Place shift lever to NEUTRAL (N).
2. If the vehicle is equipped with a winch, use the winch to roll the vehicle on the platform.
3. If the vehicle is not equipped with a winch, proceed as follows:

1. Attach strap to lower front bumper anchor.
2. Attach the strap to the winch cable of the towing vehicle.
3. Pull the vehicle on the flatbed trailer with the winch.

4. Put shift lever to Park. Apply brake locking mechanism (if equipped).

Securing Vehicle for Transport

WARNING

To avoid severe injury or death or important components damages.

- Never use the winch cable/rope to retain a vehicle during trailering.
- Never ride with the winch cable/rope attached to a load or another vehicle.
- Only use the winch to help a stuck vehicle (snow, mud, etc.).
- Always refer to the winch manufacturer's instruction before pulling loads.

1. Remove the key from the vehicle.
2. Secure the front of the vehicle using one of the following method.

- Strap the front tires by using tire towing straps, or
- Secure the vehicle by the front recovery points using retractable ratchet tie-downs.

3. Secure the other end of the straps or tie-down to front lateral attached points of the trailer.
4. Secure the rear of the vehicle using one of the following method.

- Strap the rear tires by using tire towing straps, or
- Secure the vehicle by the rear recovery points, each side of the trailer hitch, using retractable ratchet tie-downs.

5. Secure the other end of the straps or tie-down to rear lateral attached points of the trailer.
6. Ensure that vehicle is firmly attached to the trailer.

Getting Vehicle Out of Trailer

WARNING

Vehicle may have moved during transport. Ensure vehicle is properly aligned with ramps before proceeding.

WARNING

Visibility will be greatly reduced when backing off from the trailer. Have the help of an assistant to ensure proper alignment and safe environment.

LIFTING AND SUPPORTING THE VEHICLE

General Safety Information for Lifting

WARNING

Never lift the front AND rear of the vehicle without securing the support points.

Never lift the vehicle only by the support points.

1. Engage the 4WD mode.
2. Place the vehicle on a level non slippery surface.
3. Place the shift lever in PARK.
4. Lift the vehicle using a suitable lifting device and appropriate areas.

WARNING

Ensure all wheels are locked before lifting the vehicle.

Do not exceed the lifting device capacity.

Use only a device approved for lifting this type of vehicle.

Do not move the vehicle using a lifting device. Refer to the manufacturer warnings and instructions prior to use.

5. Support vehicle with jack stands in accordance with the recommended support points.

NOTE

It is recommended to use jack stands with flat heads as the frame is covered by the skid plate.

The following icon is stamped on the skid plate to indicate the location of the recommended support points.

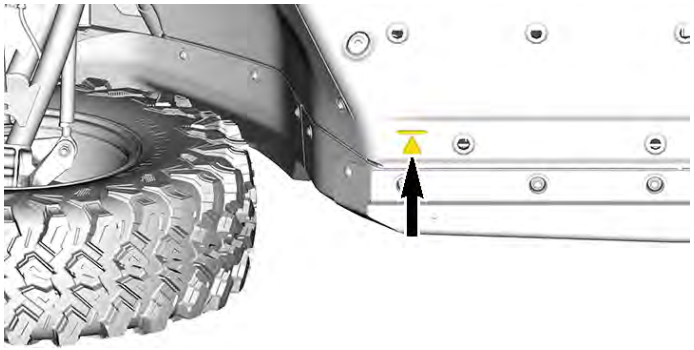

Front – LH Side

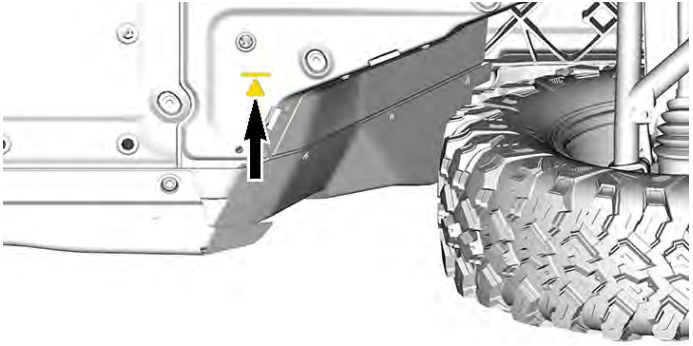

Rear – LH Side

NOTES

4 MAINTENANCE - TABLE OF CONTENTS

MAINTENANCE SCHEDULE 4-2

EPA Regulation - Canadian and USA Vehicles 4-3
Air Filter Maintenance Guideline 4-3
Severe Duty Use 4-4
Deep Mud / Water Use 4-5
Maintenance Schedule. 4-6
Maintenance Records 4-12

MAINTENANCE PROCEDURES 4-26

ENGINE AIR FILTER 4-26
EVAPORATIVE EMISSION SYSTEM PRE-FILTER (If Equipped). 4-30
ENGINE OIL. 4-33
ENGINE OIL FILTER 4-38
RADIATOR. 4-42
ENGINE COOLANT 4-44
AIR CONDITIONING FILTERS (if equipped) 4-49
EXHAUST SYSTEM 4-52
GEARBOX 4-54
FRONT DIFFERENTIAL 4-57
CVT COVER 4-59
DRIVE BELT 4-61
DRIVE AND DRIVEN PULLEYS 4-64
SPARK PLUGS 4-64
BATTERY. 4-67
FUSES AND FUSIBLE LINKS 4-71
LIGHTS 4-76
DRIVE SHAFT BELLOWS 4-79
WHEEL BEARING 4-79
WHEELS AND TIRES 4-79
SUSPENSION 4-81
BRAKES 4-83
SEAT BELTS 4-85
SIDE NETS (if equipped) 4-85
DOORS (if equipped) 4-85
CAGE. 4-86

VEHICLE CARE. 4-88

Vehicle – Cleaning and Protection 4-88

STORAGE AND PRESEASON PREPARATION 4-90

MAINTENANCE SCHEDULE

Maintenance is very important to keep your vehicle in safe operating condition. The vehicle should be serviced as per the maintenance schedule.

Proper maintenance is the owner's responsibility. A warranty claim may be denied if, among other things, the owner or operator caused the problem through improper maintenance or use.

Perform periodic checks and follow the maintenance schedule. **The maintenance schedule does not exempt the pre-ride inspection**.

⚠ WARNING
Failure to properly maintain the vehicle according to the maintenance schedule and procedures can make it unsafe to operate.

EPA Regulation - Canadian and USA Vehicles

A repair shop or person of the owner's choosing may maintain, replace, or repair emission control devices and systems. These instructions do not require components or service by BRP or authorized Can-Am Off-road dealers.

Although an authorized Can-Am Off-road dealer has an in-depth technical knowledge and tools to service your vehicle, the emission-related warranty is not conditioned on the use of an authorized Can-Am Off-road dealer or any other establishment with which BRP has a commercial relationship.

Proper maintenance is the owner's responsibility. A warranty claim may be denied if, among other things, the owner or operator caused the problem through improper maintenance or use.

For emission-related warranty claims, BRP is limiting the diagnosis and repair of emission-related parts to the authorized Can-Am Off-road dealers. For more information, please refer to the US EPA Emission-Related Warranty, page 8-9 contained in 8 Warranty, page 8-2.

You must follow the instructions for fuel requirements in the fueling section of this manual. Even if gasoline containing greater than ten volume percent ethanol is readily available, the US EPA issued a prohibition against the use of gasoline containing greater than 10 vol% ethanol that applies to this vehicle. The use of gasoline containing greater than 10 vol % ethanol with this engine may harm the emission control system.

Air Filter Maintenance Guideline

Air filter maintenance should be adjusted according to riding conditions.

Air filter maintenance must be increased in frequency when riding on snow, dry sand, dirt, gravel or similar conditions which have a high dust or particle dispersion.

Riding in a group in these conditions will require increasing the air filter maintenance frequency further.

NOTE
Accessory filters and pre-filter are available for such conditions. Contact an authorized Can-Am off-road dealer for details.

Severe Duty Use

Higher than the average use requires more frequent fluid and wear component replacement than trail, recreational, or occasional utility purposes.

For severe vehicle utilization, the maintenance must be completed at 50% of the regular intervals.

- Commercial/work and rental vehicles.
- Repeated hauling of loads at more than 75% the maximum capacity.
  - The increase workload applied to the drive system accelerates the differentials, gearbox/transmission, and engine oil life. This reduces internal component longevity if not replaced more frequently.
- Driving at excessive speeds for prolonged amount of time.

Extreme Cold Condition

An engine that is frequently operated at or below an ambient temperature of -25 °C (-13 °F) will require an increase in service and maintenance schedule.

Any combustion engine operated at these low ambient temperature will collect an increased amount of condensation at every startup/warm-up.

Since the engine is not reaching operating temperatures for extended periods of time, the oil is starting to be strongly diluted with water and gas residue (more water content).

An engine needs to reach operating temperature, in order to be able to evaporate condensate out of the oil.

If daily usage (work or leisure driving cycle) is similar to those mentioned below, BRP strongly recommends changing the oil at least once a month.

Parameters of an increase in service and maintenance schedule:

- Engine not reaching the proper operating temperature during normal daily usage
- Multiple starts and stops without reaching operating temperature
- Short idle periods
- Low RPM driving cycle in short distances without reaching operating temperature.

NOTE
BRP strongly recommends the installation of a block heater to help warm up the liquids, this will also help to extend the oil lifetime.

Deep Mud / Water Use

Whether your vehicle is a X mr model or was accessorized for deep mud / water use, this type of usage requires more frequent maintenance and inspections to ensure debris has not infiltrated mechanical components.

For severe vehicle utilization (Deep mud, water or sand, towing, cold weather operation, rock crawling activity, etc.), the maintenance must be completed at 50% of the regular intervals.

After every ride, be sure to perform the Post Operation Care for Deep Mud / Water Environment.

Post Operation Care for Deep Mud / Water Environment

- Rinse the vehicle and its components with fresh water.
- Clean the CVT air filters (if equipped).
- Drain the CVT compartment and clean if any water or mud is found.
- Inspect and clean engine air filters and engine air filter housing.
- Clean debris around exhaust pipe and muffler area and the spark arrester.
- Clean radiator.
- Visually inspect for any water accumulation in the vent hoses (fuel tank, gearbox, front differential, etc...). If there is water, bring the vehicle to your nearest authorized Can-Am off-road dealer for inspection and servicing of main components related to the vents.
- Clean front and rear shock absorbers to prevent seal from damage by dust or dirt.
- Clean bellows of drive shafts and propeller shafts.
- Check and clean propeller shaft yokes.

Maintenance Schedule

IMPORTANT

For severe vehicle utilization (immersion in mud, water or sand, towing, cold weather operation, rock crawling activity, etc.), the maintenance must be completed at 50% of the regular intervals.

Make sure to perform proper maintenance at recommended intervals as indicated in the tables.

The maintenance chart intervals are based on 3 factors:

- Calendar time
- Vehicle hours
- Odometer reading.

Take in account whichever comes first to determine the maintenance threshold.

Your driving habits determines the factors you shall adhere too. For example:

- Someone who uses their vehicle every other weekend trail riding with friends would most likely follow the **odometer reading** to determine the maintenance interval.
- Someone who uses their vehicle seldomly over the year or only on a few occasions (hunting, camping) would most likely follow the **calendar time** to determine the maintenance interval.
- Someone who uses their vehicle daily / weekly for long periods of time such as agricultural / work would most likely follow the **vehicle hours** to determine the maintenance interval.

FIRST 3 000 km (1,900 mi)	
Front differential oil	• Replace oil.
Gearbox oil	• Replace oil.

EVERY YEAR or 200 Hours or 3 000 km (1,900 mi)	
Air delivery components*	• Inspect and clean; replace air filter as needed. • Inspect and clean air filter housing, throttle body, ducts, clamps.
Battery	• Inspect and tighten connections and condition; Clean as needed.
Brake components and function*	• Inspect fluid level, brake pads, brake discs, calipers, brake lines, master cylinder. • Clean and lubricate components.
Cage fasteners	• Inspect for loose fasteners.
CVT components	• Inspect and clean the air filter, drive and driven pulley, drive belt, drive pulley rollers and hub bearings. • Lubricate the drive pulley hub bearing. • Lubricate the rollers needle bearings (pDrive only).
Drive components and function*	• Inspect for loose or worn out parts. • Inspect for oil leaks at differential and transmission.

EVERY YEAR or 200 Hours or 3 000 km (1,900 mi)	
Electronic modules (Fault codes and applicable software updates)	• Connect the vehicle to the latest version of the BRP diagnostic software (B.U.D.S.). • Scan for fault codes and take the actions to resolve the problem. • Verify for available updates.
Engine cooling components*	• Inspect coolant concentration, coolant level, hose condition, clamps, leaks. • Adjust coolant level as needed.
Engine oil and oil filter	• Replace oil and filter. • Inspect for oil leaks.
Exhaust components*	• Inspect gaskets, pipes, muffler, condition, leaks. • Inspect and clean muffler spark arrester.
Fuel components and function*	• Pressurize the fuel system by turning the ignition key ON/OFF or press the Start/Stop button. Turn or press 3-4 times. • Inspect fuel tank cap, fuel tank hoses, clamps, leaks.
Fuel tank breather (Non-EVAP model)	• Replace.

EVERY YEAR or 200 Hours or 3 000 km (1,900 mi)	
General lubrication	• Lubricate door latches, hinges and key barrels (if equipped). • Grease power tilt bed cylinder spherical bearing (if equipped) and greaseable bushings. • Steering adjustments and tilt-up mechanism.
HVAC air filter and air conditioning components	• Inspect and clean. • Replace filter if needed.
Seat belts retractors, buckles and semi-cinching	• Inspect and clean. • Test retractors locking function.
Steering components and function*	• Inspect for loose or worn out parts.
Suspension components*	• Inspect wheel bearings, suspension bushings, and ball joints for loose or worn out parts; replace as needed. • Inspect shock absorbers for leaks or damage.
*For an extensive list of maintenance actions to be performed, refer to your local dealership services.	

ADDITIONAL MAINTENANCE INTERVALS		
400 hours or 6 000 km (3,700 mi) (Regardless the calendar time)	Spark plugs	• Replace.
Every 2 years (Regardless the hours and mileage)	Brake Fluid	• Replace.
Every 2 years / 400 hours / 6 000 km (3,700 mi)	Canister vent pre-filter (CARB models)	• Replace.
	Disconnect unit (if equipped)	• Replace oil.
	Front differential oil	• Replace oil.
	Gearbox oil	• Replace oil.
Every 5 years or 12 000 km (7,500 mi) (Regardless the hours)	Coolant	• Replace.
*For an extensive list of maintenance actions to be performed, refer to your local dealership services.		

Maintenance Records

Send photocopies of the maintenance records to BRP if needed.

Pre-delivery	
Serial number: _____ Km/ Mileage: _____ Hours: _____ Date: _____ Dealer no: _____ Notes:	Signature/Print:
Refer to vehicle Pre-Delivery Bulletin for detailed installation procedures	

First inspection	
Km/ Mileage: _____ Hours: _____ Date: _____ Dealer no: _____ Notes:	Signature/Print:
For maintenance schedule refer to Maintenance Information section of this operator's guide	

Service	
Km/ Mileage: _____ Hours: _____ Date: _____ Dealer no: _____ Notes: _____	Signature/Print:
For maintenance schedule refer to Maintenance Information section of this operator's guide	

Service	
Km/ Mileage: _____ Hours: _____ Date: _____ Dealer no: _____ Notes: _____	Signature/Print:
For maintenance schedule refer to Maintenance Information section of this operator's guide	

Service	
Km/ Mileage: _____ Hours: _____ Date: _____ Dealer no: _____ Notes: _____	Signature/Print:
For maintenance schedule refer to Maintenance Information section of this operator's guide	

Service	
Km/ Mileage: _____ Hours: _____ Date: _____ Dealer no: _____ Notes: _____	Signature/Print:
For maintenance schedule refer to Maintenance Information section of this operator's guide	

Service	
Km/ Mileage: _____ Hours: _____ Date: _____ Dealer no: _____ Notes: _____	Signature/Print:
For maintenance schedule refer to Maintenance Information section of this operator's guide	

Service	
Km/ Mileage: _____ Hours: _____ Date: _____ Dealer no: _____ Notes: _____	Signature/Print:
For maintenance schedule refer to Maintenance Information section of this operator's guide	

Service	
Km/ Mileage: _____ Hours: _____ Date: _____ Dealer no: _____ Notes: _____	Signature/Print:
For maintenance schedule refer to Maintenance Information section of this operator's guide	

Service	
Km/ Mileage: _____ Hours: _____ Date: _____ Dealer no: _____ Notes: _____	Signature/Print:
For maintenance schedule refer to Maintenance Information section of this operator's guide	

Service	
Km/ Mileage: _____ Hours: _____ Date: _____ Dealer no: _____ Notes: _____	Signature/Print:
For maintenance schedule refer to Maintenance Information section of this operator's guide	

Service	
Km/ Mileage: _____ Hours: _____ Date: _____ Dealer no: _____ Notes: _____	Signature/Print:
For maintenance schedule refer to Maintenance Information section of this operator's guide	

Service	
Km/ Mileage: _____ Hours: _____ Date: _____ Dealer no: _____ Notes: _____	Signature/Print:
For maintenance schedule refer to Maintenance Information section of this operator's guide	

Service	
Km/ Mileage: _____ Hours: _____ Date: _____ Dealer no: _____ Notes: _____	Signature/Print:
For maintenance schedule refer to Maintenance Information section of this operator's guide	

Service	
Km/ Mileage: _____ Hours: _____ Date: _____ Dealer no: _____ Notes: _____	Signature/Print:
For maintenance schedule refer to Maintenance Information section of this operator's guide	

Service	
Km/ Mileage: _____ Hours: _____ Date: _____ Dealer no: _____ Notes: _____	Signature/Print:
For maintenance schedule refer to Maintenance Information section of this operator's guide	

MAINTENANCE PROCEDURES

This section includes instructions for basic maintenance procedures.

Due to the complexity of some of the maintenance procedures, good mechanical skills are required. If you are not comfortable with these procedures, do not hesitate to contact an authorized Can-Am dealer, repair shop or person of your own choosing.

WARNING

Unless otherwise indicated, always turn ignition switch to the OFF position before performing any maintenance and remove key.

WARNING

Should removal of a locking device be required (e.g. lock tab, self-locking fastener, etc.) , always replace it with a new one.

ENGINE AIR FILTER

NOTICE

Never modify the air intake system. Otherwise, engine performance degradation or damage can occur. The engine is calibrated to operate specifically with these components.

Replacement Guideline for the Engine Air Filter

Engine air filter inspection and replacement frequency should be adjusted according to riding conditions as it is critical to ensure proper engine performance and life span.

Engine air filter inspection and replacement frequency must be increased for the following severe riding conditions:

- Riding on dry sand.
- Riding on dry dirt covered surfaces.
- Riding on dry gravel trails or similar conditions.
- Riding in areas with high concentration of seeds or crop husks.
- Riding in severe snow conditions.

NOTICE

When riding in dusty conditions or sand, the air box needs to be cleaned before every ride.

NOTE

Riding in a group, under these conditions, increases the frequency of the air filter maintenance.

Removing the Engine Air Filter

1. Tilt the cargo box to access the engine air filter.

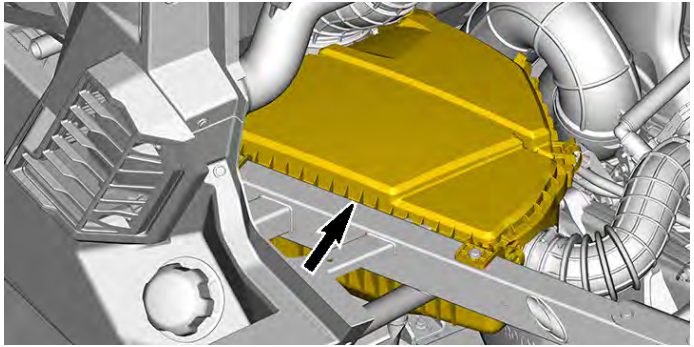

2. Unlatch the air filter cover.

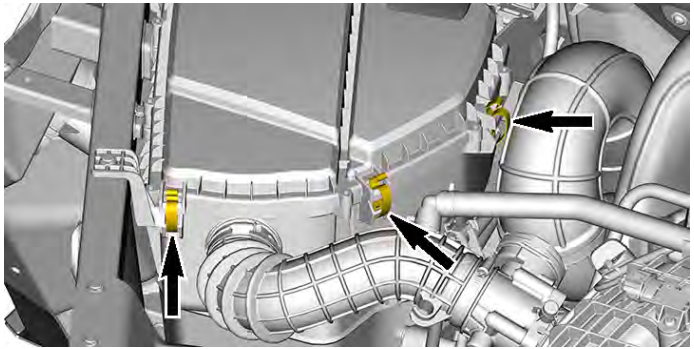

3. Remove the air filter.

NOTE
Avoid knocking the filter against the housing.

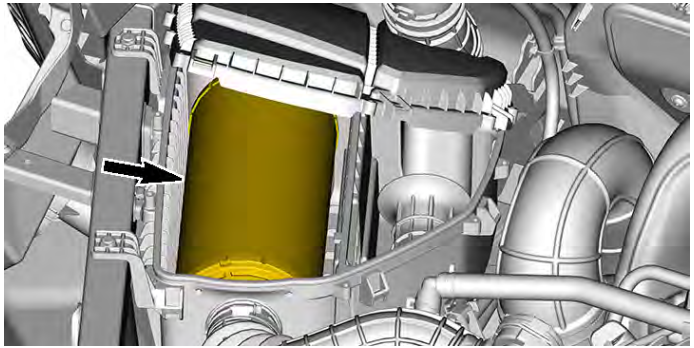

Cleaning the Engine Air Filter

1. Inspect the filter for any signs of leaks. A streak of dust on the clean side of the filter is a telltale sign. Replace filter if there is any damages. Eliminate any source of air leaks before installing a new filter.
2. Clean engine air filter by tapping out heavy dust from paper element, this will allow dirt and dust to get out of the paper filter.

NOTICE
It is not recommended to blow compressed air on the paper element; this could damage the paper fibers and reduce its filtration ability when used in dusty environments. If engine air filter is too dirty and cannot be cleaned following the recommended procedure, it should be replaced.

3. Inspect air filter housing for cleanliness. Clean if necessary.
4. Use a clean damp cloth to wipe both the filter sealing surface and the inside of the inlet tube. Ensure that the inlet tube sealing area is undamaged.

Installing the Engine Air Filter

1. Install the air filter in the housing.

NOTE
Avoid knocking the filter against the housing.

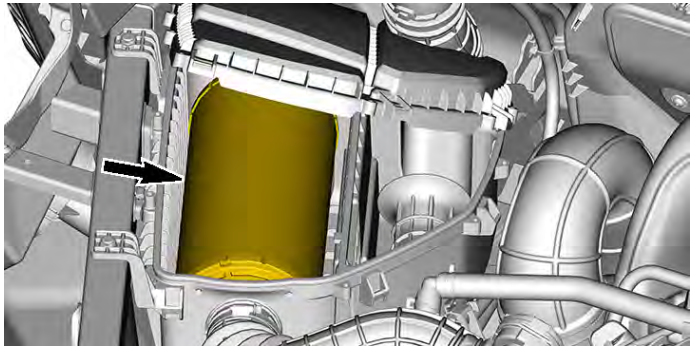

2. Secure the air filter cover.

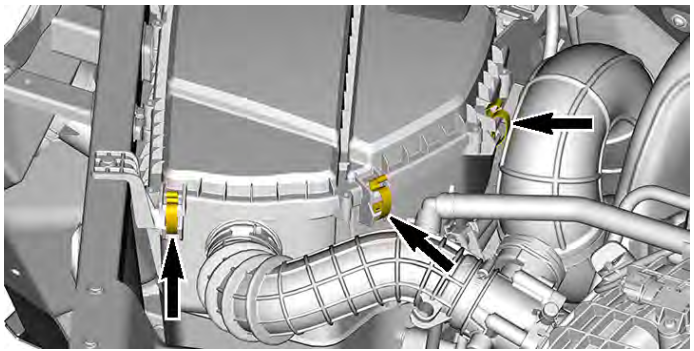

3. Tilt the cargo box back in place.

Cleaning the Airbox Duckbill Valve

1. Remove the LH rear deflector by removing the following fasteners.

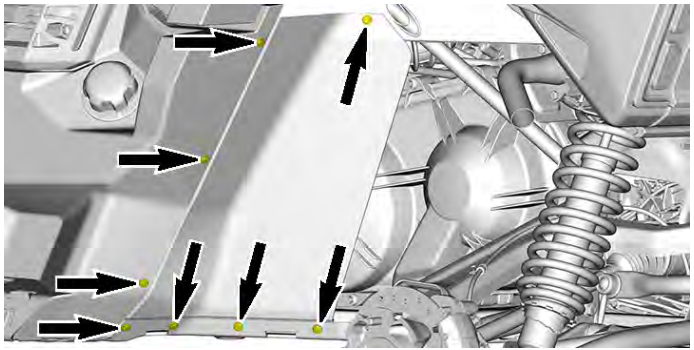

2. Visually check and physically squeeze the duckbill valve.

NOTICE
Make sure the duckbill valve is flexible and not inverted, damaged or plugged.

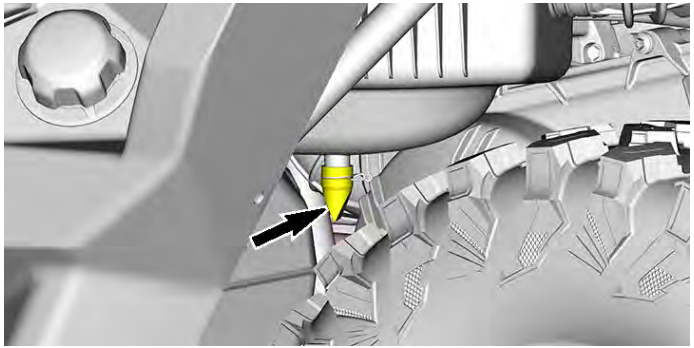

EVAPORATIVE EMISSION SYSTEM PRE-FILTER (If Equipped)

Replacing the Evaporative Emission System Pre-Filter

1. Tilt the cargo box.
2. Remove the following fasteners.

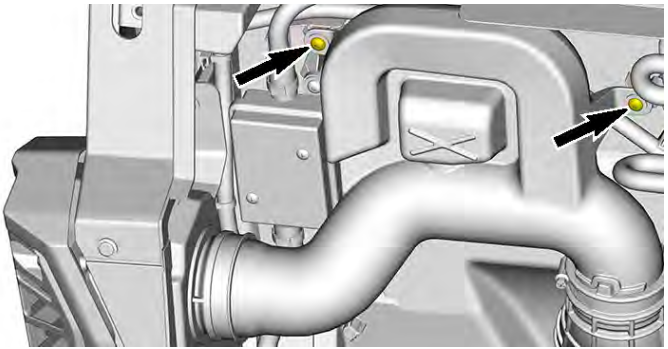

3. Disconnect the air intake side of the resonator. Set the resonator aside.

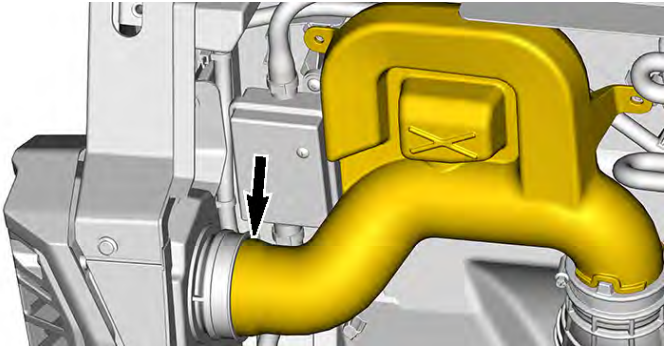

4. Remove the following fasteners.

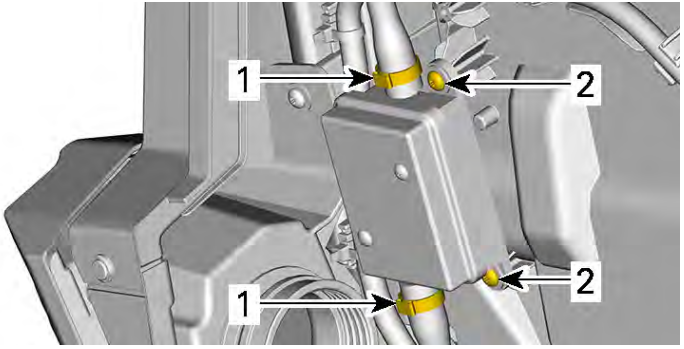

1. Oetiker clamp (discard)
2. K50 x 20 Torx screw

5. Replace and secure the pre-filter assembly. Install new Oetiker clamps.

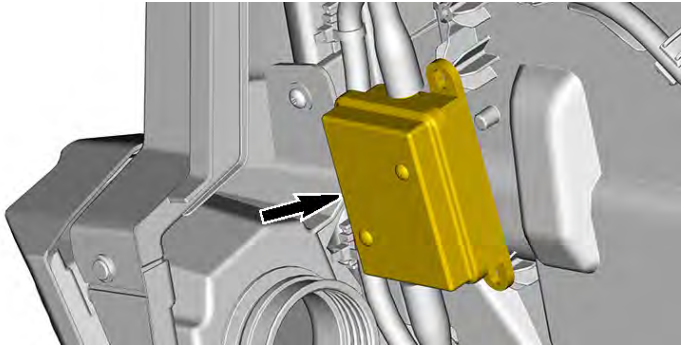

6. Tighten to specification.

Tightening Torque	
Pre-filter retaining screw	2.5 ± 0.5 Nm (22 ± 4 lbf-in)

7. Secure the air intake side of the resonator.

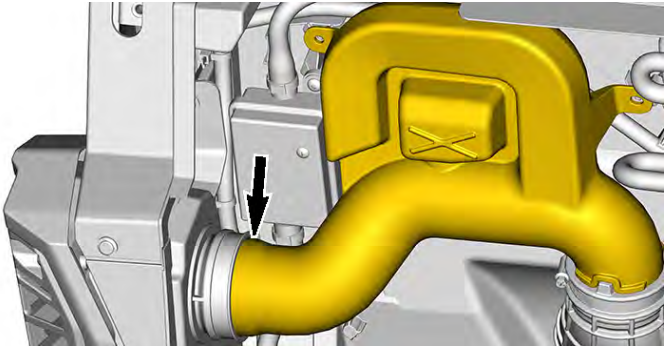

8. Secure the resonator.

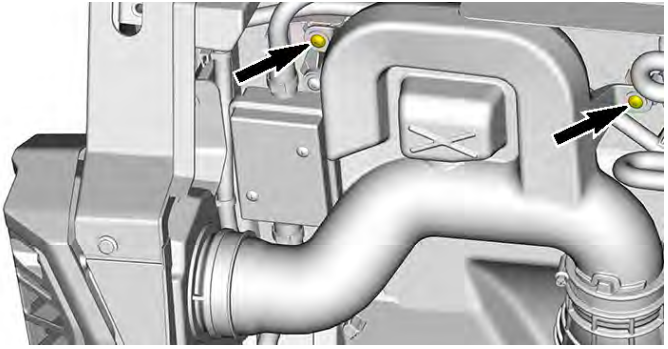

9. Tighten to specification.

Tightening Torque	
Resonator screw	2.5 ± 0.5 Nm (22 ± 4 lbf-in)

10. Tilt the cargo box back in place.

ENGINE OIL

Engine Oil – Recommended Type

Rotax® engines were developed and validated using the XPS® oil.

BRP recommends the use of its XPS engine oil or an equivalent at all time.

Damage caused by the use of an oil not suitable for the engine may not be covered by the BRP Limited Warranty.

XPS Recommended Engine Oil	
General purpose	5W40 synthetic oil
Cold temperature	0W40 synthetic oil
Warm temperature	10W50 synthetic oil

If the recommended XPS engine oil is not available:

- Use a 4-stroke SAE engine synthetic oil meeting or exceeding the following lubricant industry specifications.
- Always check the API service label certification on the oil container, it must contain at least one of the indicated standards.
  - **API service classification SN, or**
  - **JASO MA2**

Engine Oil – Level Check

NOTICE
Operating the engine with an improper oil level may severely damage engine.

1. Place the vehicle on a level surface.
2. Tilt the cargo box.
3. Unscrew and remove the dipstick.

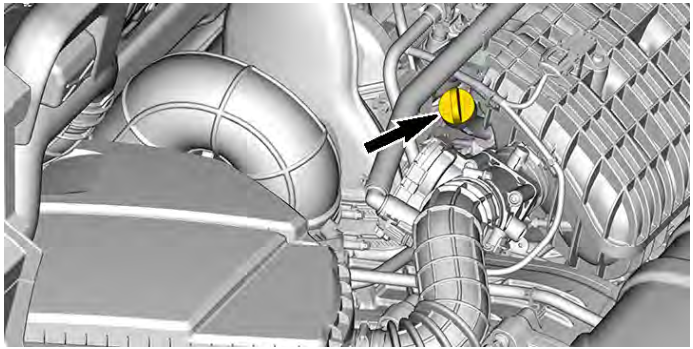

4. Check if there is any oil visible on the "COLD" operating range.

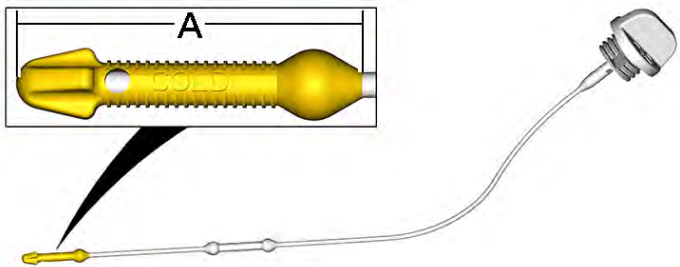

A. COLD operating range

NOTICE

The “COLD” operating range is only used as an indicator if there is sufficient oil inside the engine to start safely.

5. If any oil is visible on "COLD" operating range, the engine can be started without any restrictions. Go to STEP 7.

NOTICE

In some cases, the oil level may also rise above the “COLD” operating range. Please consider that this reading doesn’t indicate the oil level at normal operating temperatures.

6. If there is no oil visible on the dipstick, add a small amount of recommended oil and recheck oil level (refer to STEP 5).

Redo this step until a maximum of 2 l (2.11 qt (liq.,US)) has been added.

If after adding 2 l (2.11 qt (liq.,US)) no oil is visible on dipstick, perform an oil change.

7. Start the engine and let it reach its normal operating temperature. The normal operating temperature is reached when the fan comes on.
8. When the operating temperature is reached, let it idle for at least 20 seconds.
9. Stop the engine and wait 60 seconds.
10. Unscrew and remove the dipstick then wipe clean.
11. Reinstall the dipstick, screw it in completely.
12. Remove the dipstick and check the oil level. It should be between the MIN and MAX indicators of the WARM operating range.

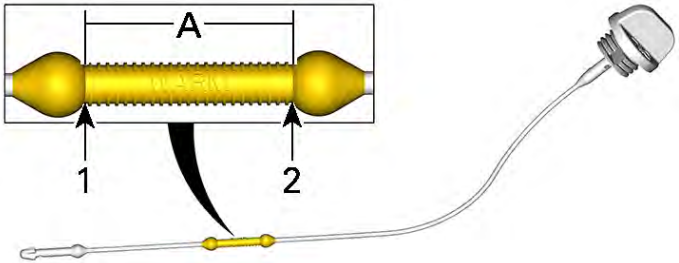

1. MIN
2. MAX
A. WARM operating range

13. To add oil, remove the dipstick. Place a funnel into the dipstick tube.
14. Add a small amount of the recommended oil and recheck the oil level.

15. Repeat the above procedures until the oil level is between the MIN and MAX indicators of the WARM operating range.

NOTICE
Do not overfill. Wipe off any spillage.

16. Properly tighten dipstick.

Engine Oil – Change

⚠ CAUTION
The engine oil can be very hot. Wait until engine oil is warm.

NOTICE
Engine oil and oil filter must be replaced at the same time.

1. Place the vehicle on a level surface.
2. Start the engine and let it reach its normal operating temperature (around 90 °C (32 °F)).
3. Stop the engine.
4. Tilt the cargo box.
5. Unscrew and remove the dipstick.
6. Place a drain pan under the engine drain plug area.

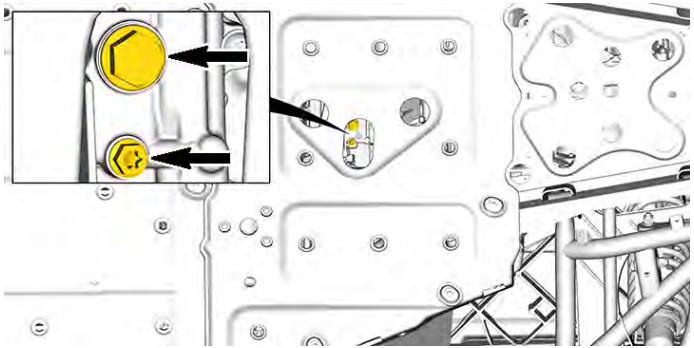

7. Clean the drain plug area.

8. Unscrew the drain plugs and discard the gasket rings.

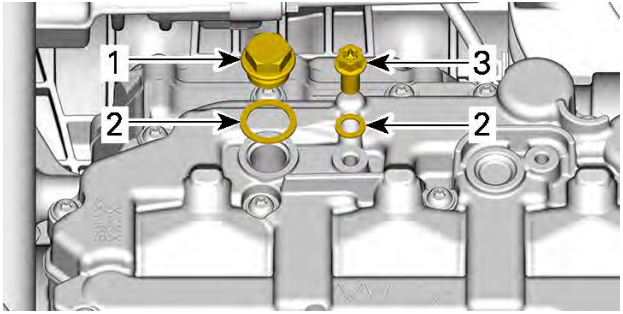

1. Magnetic drain plug
2. Gasket ring
3. Secondary drain plug

9. Let the oil drain until only 1 drop of oil per second is coming out of the engine.

10. Replace the oil filter, refer to Engine Oil Filter – Removal, page 4-38.

11. Clean the magnetic drain plug from the metal shavings and residue. Presence of debris gives an indication of internal engine damage.

12. Install a **NEW** gasket rings on the drain plugs.

NOTICE
Never use the gasket ring a second time. Always replace by a **NEW** one.

13. Tighten to specification.

Tightening Torque	
Secondary drain plug	15 ± 2 N·m (133 ± 18 lbf·in)
Magnetic drain plug	30 ± 3 N·m (22 ± 2 lbf·ft)

14. Refill the engine with the recommended engine oil.

Engine Oil Capacity	
Engine oil and engine oil filter replacement	3.4 l (3.6 qt (liq.,US)) (HVAC models)
	3.2 l (3.4 qt (liq.,US))

15. After filling, check the oil level, refer to Engine Oil – Level Check, page 4-34.
16. Dispose oil and filter as per your local environmental regulations.

ENGINE OIL FILTER

Engine Oil Filter – Location

The engine oil filter is located to the front of the right side of the engine.

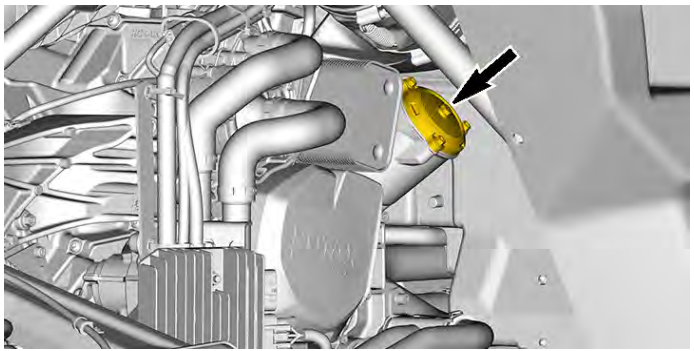

Engine Oil Filter – Removal

1. Clean the oil filter area.
2. Clean the oil filter cover.
3. Remove the evacuation screw on the top of the cover.
4. Discard the gasket ring.

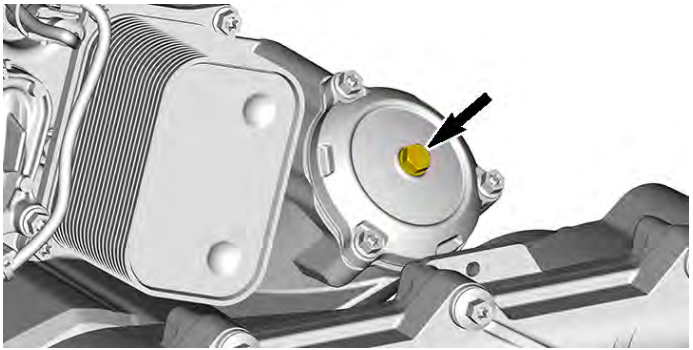

5. Empty the oil filter housing by activating the vacuum/pressure pump in pressure mode 10 to 15 times.

NOTICE
Failure to do this step before removing the cover will cause significant engine oil leakage behind the HVAC belt housing. The cleaning of this area is very difficult.

Vacuum/pressure pump **(P/N 529021800)**	

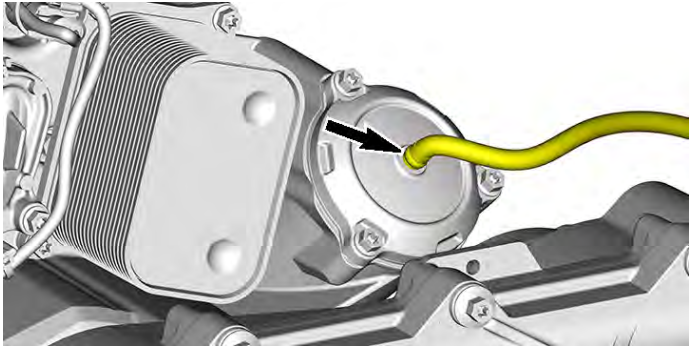

6. Remove the following fasteners.

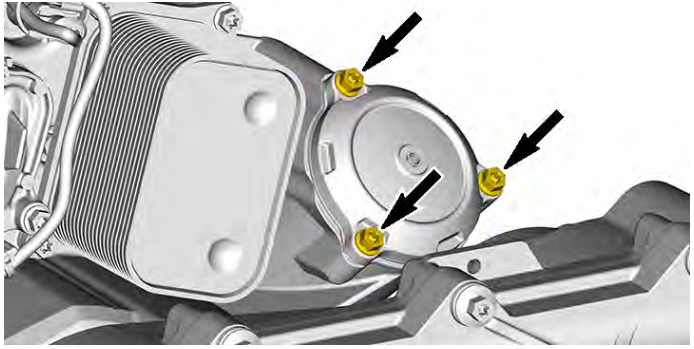

7. Remove the oil filter cover.

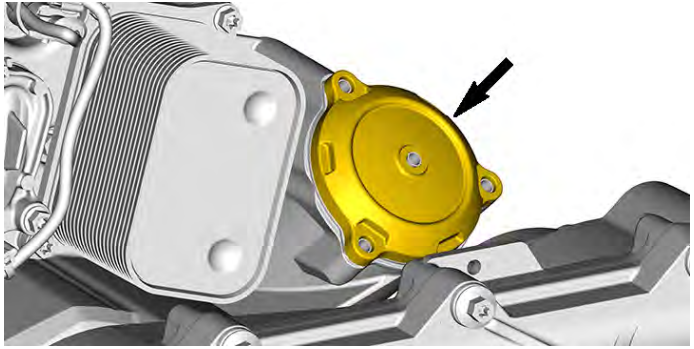

8. Remove and discard the engine oil filter.

Engine Oil Filter – Installation

1. Check and clean the oil filter inlet and outlet area for dirt and other contaminations.

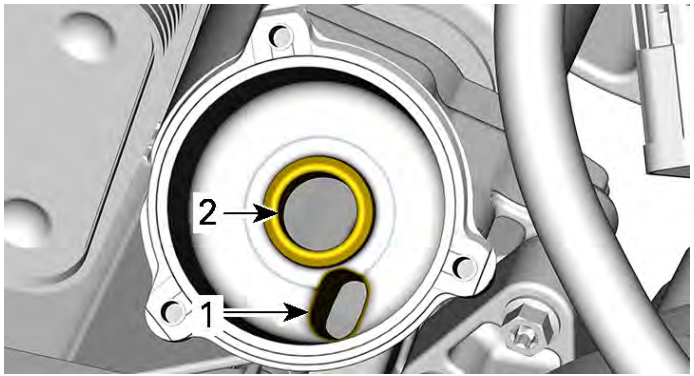

1. Engine oil coming from the pump
2. Filter outlet towards the engine oil circuit

2. Wet a **NEW** O-ring with the engine oil and slip it onto the oil filter cover.
3. Install the new filter into the cover.
4. Apply engine oil to the seal on the open end of the oil filter.

1. O-ring
2. Seal

5. Install the cover with the new filter into the filter housing.

NOTICE
Pay attention to avoid pinching the O-ring during filter and cover installation.

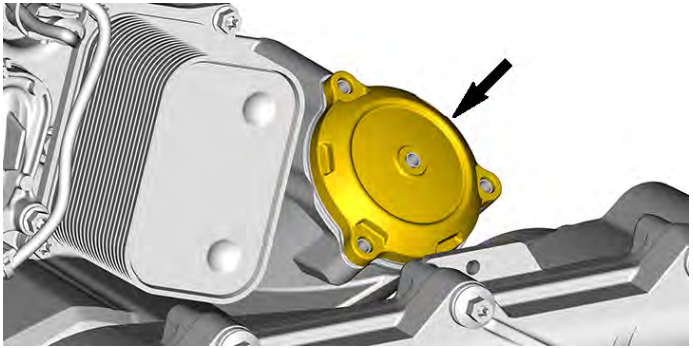

6. Tighten the oil filter cover screws to specification.

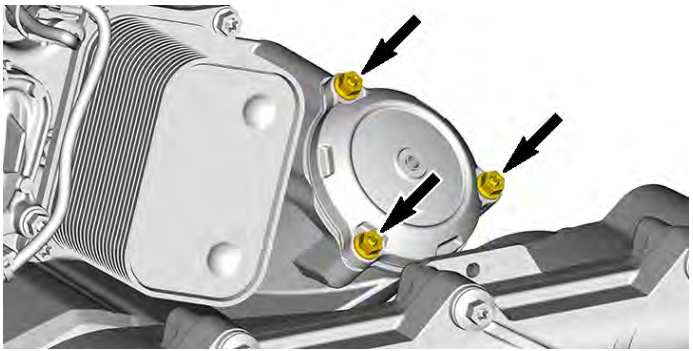

Tightening Torque	
Oil filter cover screws	9 ± 1 N·m (80 ± 9 lbf·**IN**)

7. Install a **NEW** gasket ring on the evacuation screw.
8. Install and tighten evacuation screw to specification.

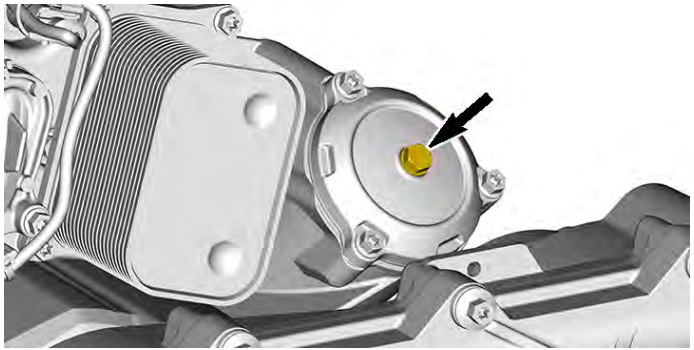

Tightening Torque	
Evacuation screw	6 ± 0.7 N·m (53 ± 6 lbf·**IN**)

9. Wipe off any oil spillage on engine.

RADIATOR

Radiator – Cleaning and Inspection

1. Through the wheel arches, inspect the radiator and its hoses for leaks or any other damages.
2. Remove mud, dirt, leaves or any other deposit from the radiator fan and HVAC condenser (if equipped) areas.
3. Pull the bottom and the top of the front grille to remove it.

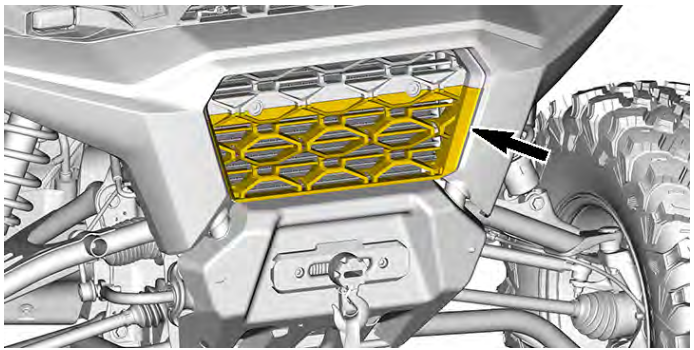

4. Visually, inspect the radiator fins. They must be clean, free of mud, dirt, leaves or any other deposit that would prevent air from passing freely trough the radiator.
5. Using a garden hose, rinse the radiator fins.

⚠ CAUTION

Never clean radiator with your hands when it is hot. Let the radiator cool down before cleaning.

NOTICE

Be careful not to damage the radiator fins when cleaning. Do not use any object/tool that could damage the fins. When hosing, use low pressure only. Never use a HIGH PRESSURE washer.

6. When the cleaning is completed, install the front grille. Align the four tabs with the metallic clips and push to secure the grille.

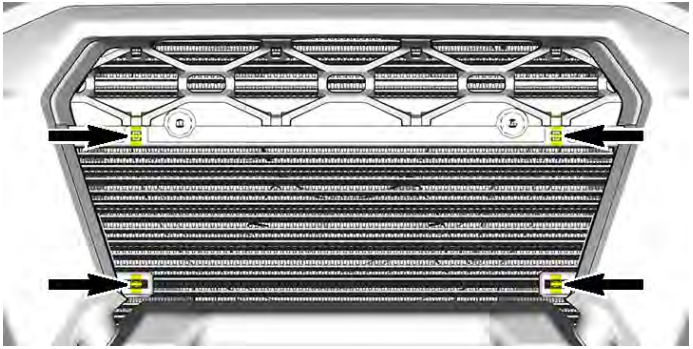

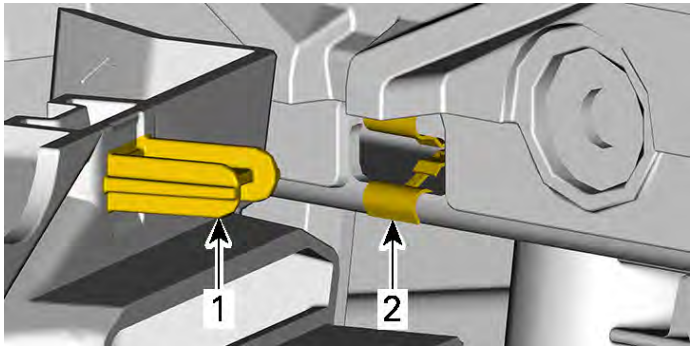

1. Tab
2. Clip

ENGINE COOLANT

Recommended Type of Engine Coolant

BRP recommends the use of its XPS engine coolant or an equivalent at all time.

Damage caused by the use of a coolant not suitable for the engine may not be covered by the BRP Limited Warranty.

XPS Recommended Engine Coolant
XPS Extended life pre-mixed coolant

If the recommended XPS engine coolant is not available:

- Use distilled water and antifreeze solution (50% distilled water, 50% antifreeze).

NOTICE
Always use ethylene-glycol antifreeze containing corrosion inhibitors specifically for internal combustion aluminum engines.

Checking Engine Coolant Level

NOTICE
Check coolant level with engine cold.

NOTICE
A cooling system that frequently requires addition of coolant is an indication of leaks or engine problems.

1. Place the vehicle on a level surface.
2. Open the front hood and locate the coolant tank.

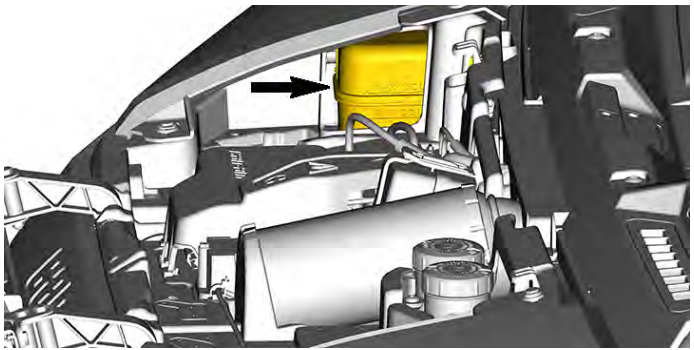

3. Ensure the cooling system is full up to the MAX line.

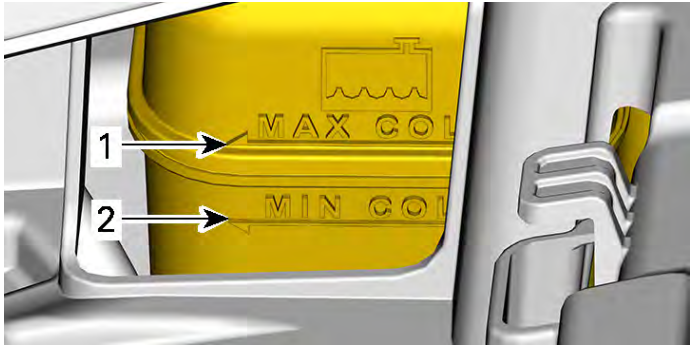

1. MAX
2. MIN

4. If the level is close to or lower than the “MIN” level mark, add coolant up to the “MAX” level mark.

Refilling the Engine Coolant

NOTICE
A cooling system that frequently requires addition of coolant is an indication of leaks or engine problems.

1. Remove the following fasteners.

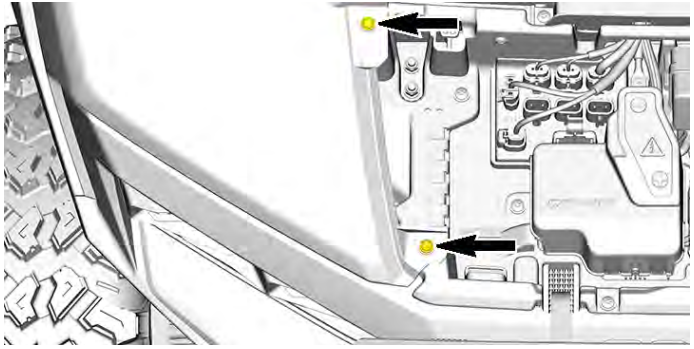

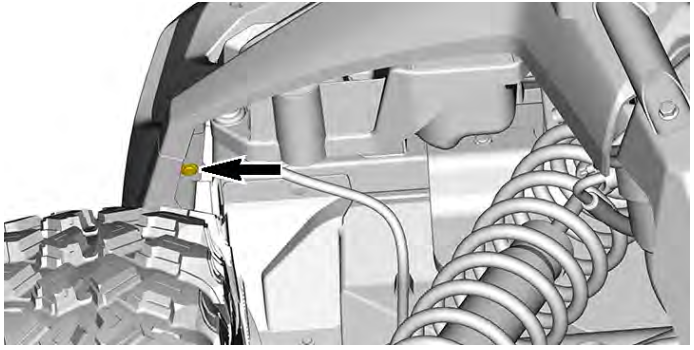

2. Remove the right front fender.

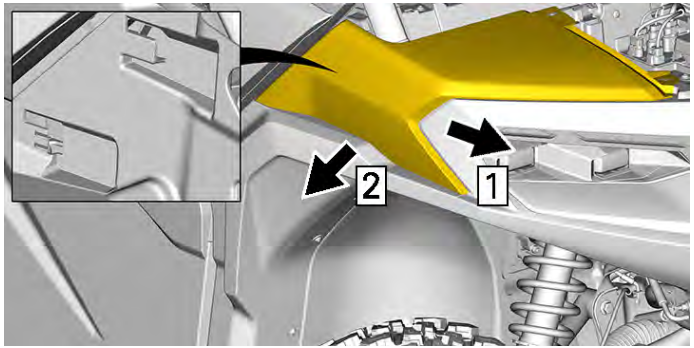

1. Slide forward
2. Remove fender

3. Remove the coolant tank pressure cap.
4. Using a funnel to avoid spillage, add coolant in the system as necessary. **Do not overfill**.
5. Properly reinstall the pressure cap on the cooling tank.
6. Install the front fender.
7. Close the front hood.

Replacing the Engine Coolant

1. Place the vehicle on a level surface.
2. Lift and support the vehicle.
3. Place a drain pan under the right side of the radiator.
4. Remove the lower coolant hose from the radiator. Keep the spring clamp for installation.

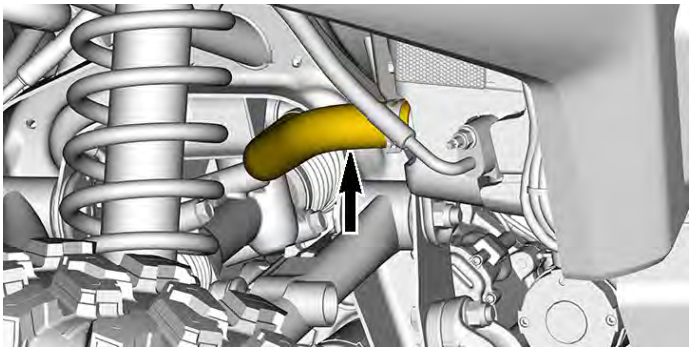

5. Remove the coolant reservoir cap.
6. After draining, reinstall the cooling hose using the previously removed spring clamp.
7. Clean the vehicle parts.

8. Remove the right rear deflector by removing the following fasteners.

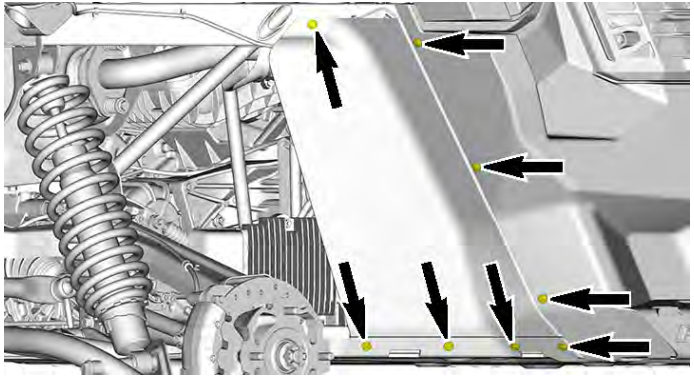

9. Remove the rear skid plate by removing the following fasteners on both sides.

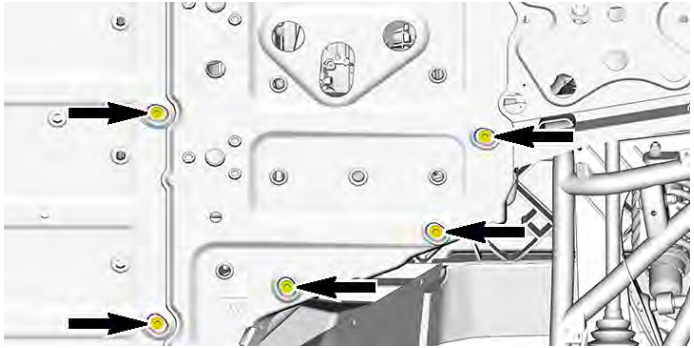

LH Side

10. Place a drain pan under the right side of the engine aligned with the engine oil cooler.

11. Unscrew the coolant drain plug on the engine.

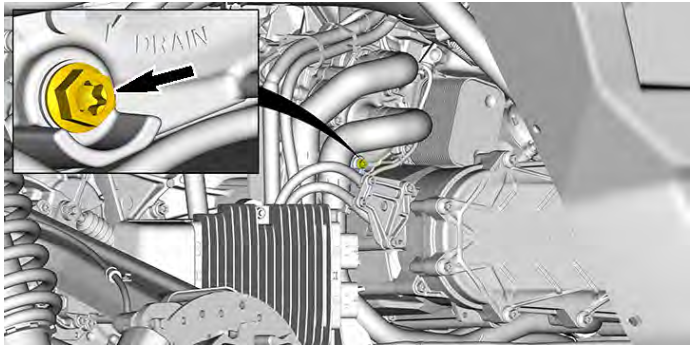

12. After draining, squeeze the coolant hose just above the drain plug a few times to drain more coolant.

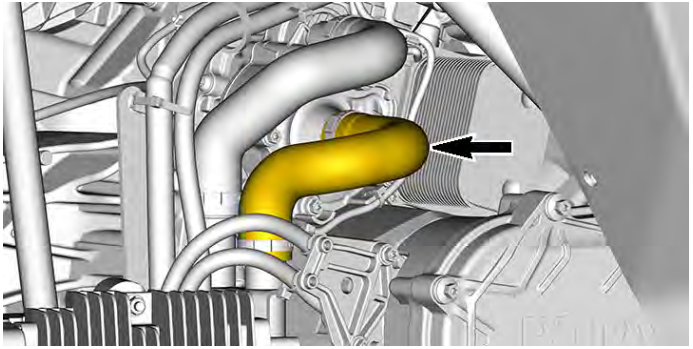

13. Remove the coolant drain plug and discard the sealing washer.
14. Reinstall the drain plug with a **NEW** sealing washer.
15. Tighten to specification.

Tightening Torque	
Coolant drain plug	9 ± 1 Nm (80 ± 9 lbf-**IN**)

16. Put the vehicle back on the ground.

17. Refill and bleed the cooling system.

Bleeding the Engine Coolant

1. If not already done, remove the coolant reservoir cap.
2. Fill the coolant system until it is full up to the MAX line on the coolant tank.

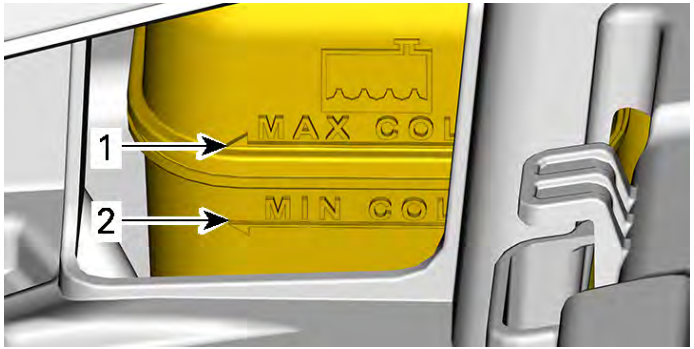

1. MAX
2. MIN

3. Install the coolant reservoir cap.
4. Run the engine at idle until the cooling fan cycles on for a second time.
5. Stop the engine and let it cool down.

WARNING

In order to avoid potential burns, do not remove the pressure cap if the engine is hot.

6. When the engine is cool, check the coolant level and, if required, add coolant again.
7. Reinstall all previously removed parts.
8. Do a ride and recheck the coolant level. Add coolant as required.

AIR CONDITIONING FILTERS (if equipped)

NOTICE

The cleaning of the filters must be performed more often than recommended when riding in dusty conditions or sand.

Replacing the Air Conditioning Filter (External Air Inlet)

1. Open the front hood and locate the filter.

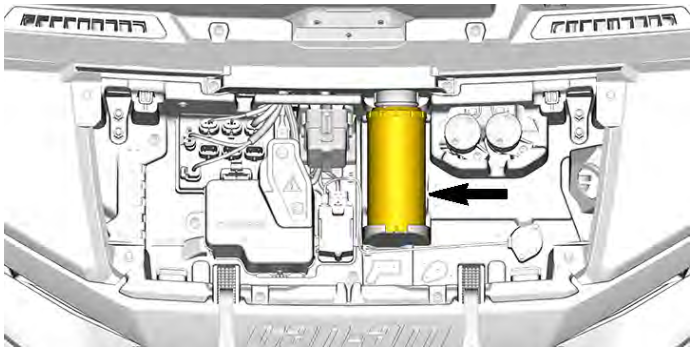

2. Slide rearward, lift then slide forward the filter to remove it.

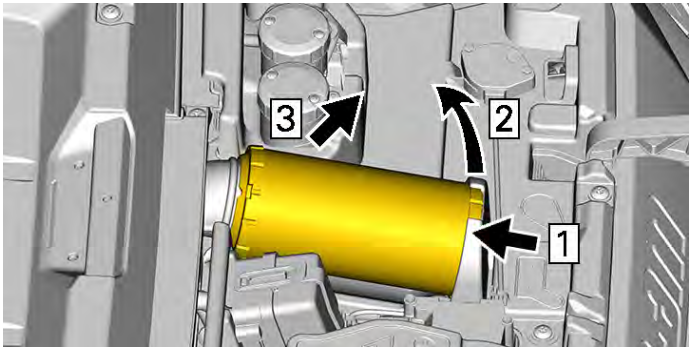

1. Slide rearward
2. Lift
3. Slide forward

3. Inspect the filter for any signs of leaks. A streak of dust on the clean side of the filter is a telltale sign. Replace the filter if there is any damages. Eliminate any source of air leaks before installing a new filter.

4. Clean the air filter by tapping out heavy dust from paper element, this will allow dirt and dust to get out of the paper filter.

NOTICE
It is not recommended to blow compressed air on the paper element; this could damage the paper fibers and reduce its filtration ability when used in dusty environments. If air filter is too dirty and cannot be cleaned following the recommended procedure, it should be replaced.

5. Use a clean damp cloth to wipe both the filter sealing surface and the inside of the outlet tube. Ensure that the outlet tube sealing area is undamaged.
6. Spray a small quantity of soap solution on the rubber surfaces to help installation.
7. Reinstall the filter or install a new one.
8. Close the front hood.

Replacing the Air Conditioning Filter (Cabin)

This filter is located inside the air conditioning unit.

1. Pull the front grille by using the lower opening.

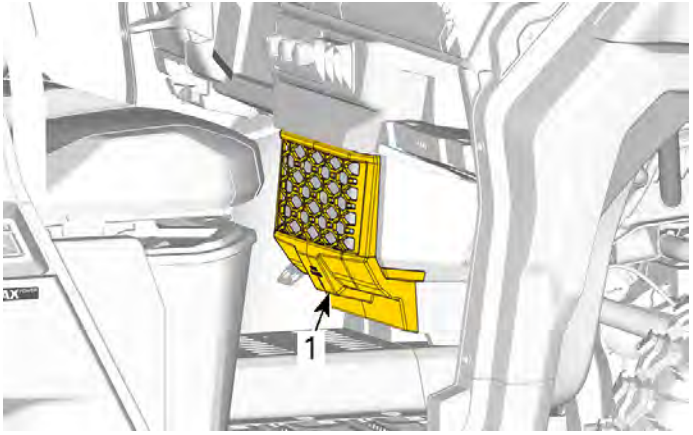

1. Grab front grille here to remove

2. Pull the air filter to remove it.

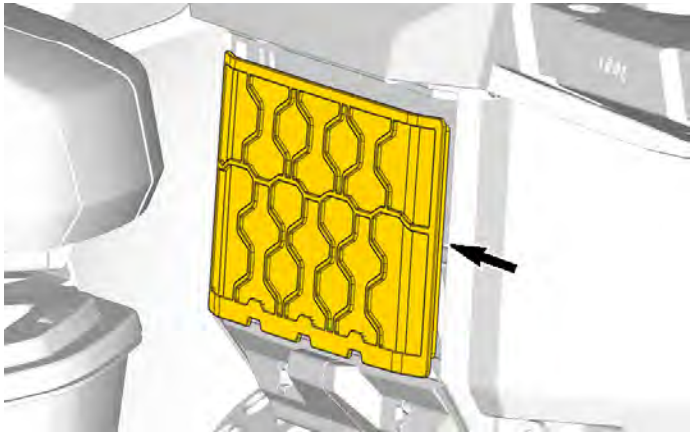

3. Install a new air filter and the grille.

EXHAUST SYSTEM

Exhaust system - Area Surrounding Cleaning

WARNING

Debris accumulation could lead to a vehicle fire when the exhaust system is hot and the debris are dried.

In some cases, that could result in serious properly damages, injuries or even death.

Clean often and regularly the area surrounding the exhaust system when riding in swamp, bog, hay or dead leaves.

In other situations, clean as per maintenance schedule requirement.

Also, check all exhaust heat shields for damage regularly and replaced when needed.

CAUTION

Never perform this operation immediately after the engine has been running because exhaust system is very hot.

1. From the rear of the vehicle, clean the areas around the muffler.
2. Clean the areas around the exhaust pipe and the exhaust manifold.
3. Clean also under the heat shields.

Muffler Spark Arrester – Inspection and Cleaning

CAUTION

Never perform this operation immediately after the engine has been running as exhaust system is very hot.

1. Remove and discard the tail pipe screws.

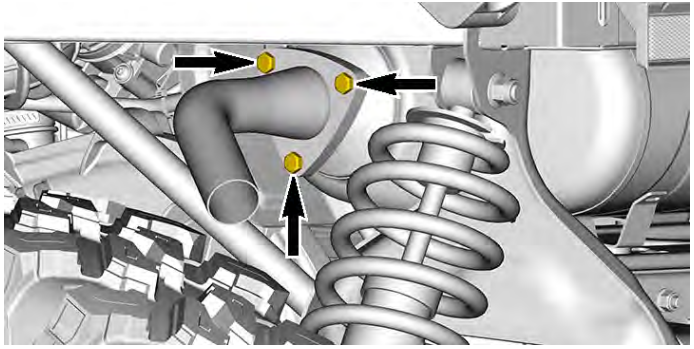

2. Remove the exhaust tail pipe and the spark arrester.

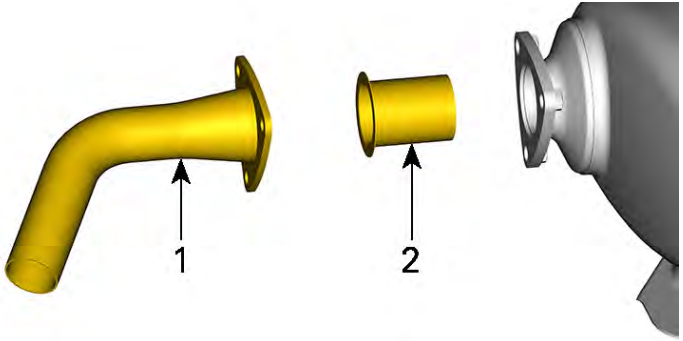

1. Tail pipe
2. Spark aresster

3. Remove carbon deposits from the spark arrester using a brush.

NOTICE

Use a metallic soft brush and be careful to avoid damaging spark arrester mesh.

4. Inspect the mesh of the spark arrester for any damage. Replace as required.
5. Inspect the spark arrester chamber in the muffler. Remove any debris as required.

6. Reinstall the muffler spark arrester and the tail pipe.
7. Tighten the **NEW** tail pipe screws to specification.

Tightening Torque	
Tail pipe screws	31.5 ± 3.5 Nm (23 ± 3 lbf-ft)

GEARBOX

Gearbox Oil - Recommended Type

BRP recommends the use of its XPS gearbox oil or an equivalent at all time.

XPS Recommended Gearbox Oil
75W140 synthetic gear oil

If the recommended XPS gearbox oil is not available, use:

- 75W140 API GL-5 synthetic gear oil

Gearbox Oil - Level Check

NOTICE
Operating the gearbox with an improper oil level may severely damage gearbox.

1. Place the vehicle on a level surface. Select the PARK position.
2. Check the gearbox oil level, at ambient temperature, by removing the gearbox oil level plug located at the rear of vehicle, on the LH side.

NOTICE
Pay attention not to lose the oil level plug O-ring.

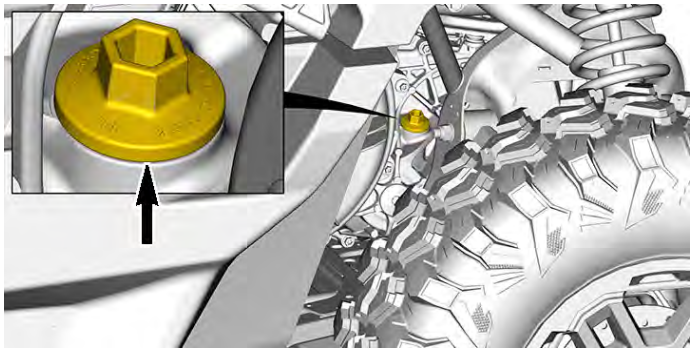

3. Wipe it.
4. Reinstall the plug, screw it in completely.

5. Remove the plug again and check the oil level on the dipstick. It should be near or equal to the upper mark.

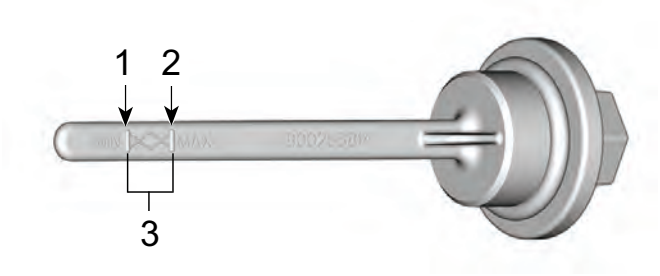

1. MIN.
2. MAX.
3. Operating range

6. If required, place a funnel into the oil level plug hole and add a small amount of recommended oil.
7. Recheck the oil level.
8. Repeat the above procedures until oil level reaches the dipstick's upper mark.

NOTE
Do not overfill. Wipe off any spillage.

9. Reinstall the plug and tighten it to specification.

Tightening Torque	
Gearbox oil level plug	6 ± 0.4 Nm (53 ± 4 lbf-in)

Gearbox Oil - Replacement

Oil change should be done with a warm engine.

CAUTION
The gearbox oil can be very hot.

1. Place the vehicle on a level surface.
2. Clean the drain plug area.
3. Clean the oil level plug area.
4. Under the vehicle, place a drain pan underneath the magnetic drain plug area.
5. Remove the gearbox oil level plug (dipstick).

NOTICE
Pay attention not to lose the oil level plug O-ring.

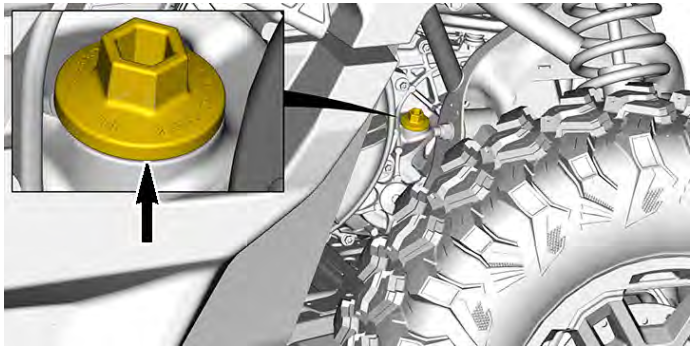

6. Remove the magnetic gearbox drain plug and discard sealing ring.

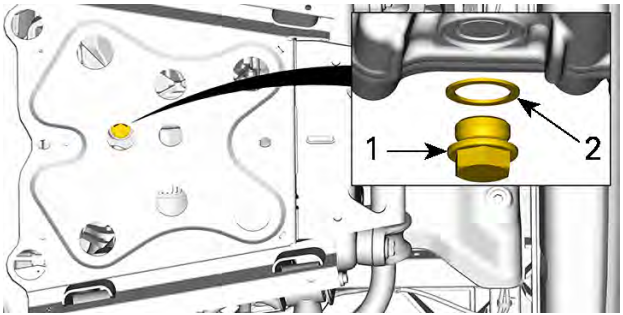

1. Drain plug
2. Sealing ring

7. Let oil completely drain from the gearbox.
8. Clean the drain plug from any metallic particles.
9. Reinstall the magnetic drain plug using a **NEW** sealing ring.
10. Tighten the drain plug to specification.

Tightening Torque	
Gearbox magnetic drain plug	30 ± 3 Nm (22 ± 2 lbf-ft)

11. Refill the gearbox with recommended oil, refer to Gearbox Oil - Recommended Type, page 4-54.
12. Check the oil level, refer to Gearbox Oil - Level Check, page 4-54.
13. Dispose of used gearbox oil in accordance with local environmental regulations.

FRONT DIFFERENTIAL

Front Differential Oil - Recommended Type

BRP recommends the use of its XPS differential oil or an equivalent at all time.

XPS Recommended Differential Oil
75W90 synthetic gear oil

If the recommended XPS differential oil is not available, use:

- 75W90 API GL-5 synthetic gear oil

Front Differential Oil – Level Check

1. Place the vehicle on a level surface.
2. Set the shifter in park position.
3. From the left side of the vehicle, clean the filler plug area.
4. Unscrew the filler plug.

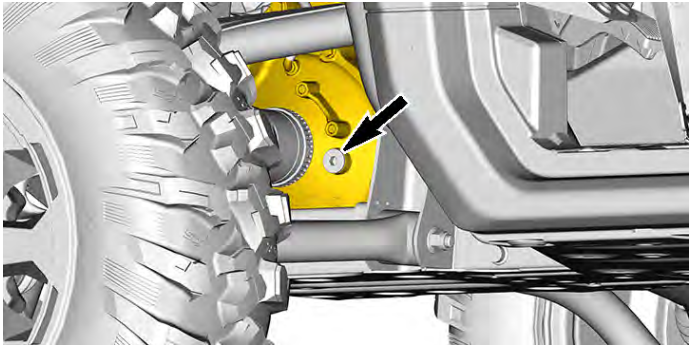

Typical

5. Check the oil level. The oil should reach the lower edge of the threaded hole.
6. Add recommended differential oil if required.
7. Reinstall the filler plug and tighten it to specification.

Tightening Torque	
Filler plug	16.5 ± 2.5 Nm (146 ± 22 lbf-**IN**)

Front Differential Oil – Replacement

1. Place the vehicle on a level surface.
2. Set the shifter in park position.
3. From underneath the front of the vehicle, clean the drain plug area.

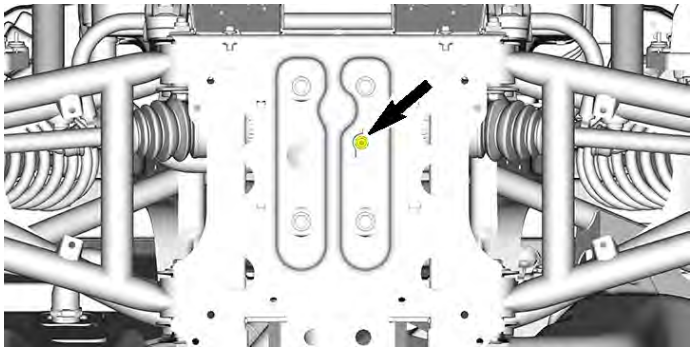

4. Place a drain pan under the front differential drain plug area.
5. Remove the drain plug.
6. Unscrew filler plug.

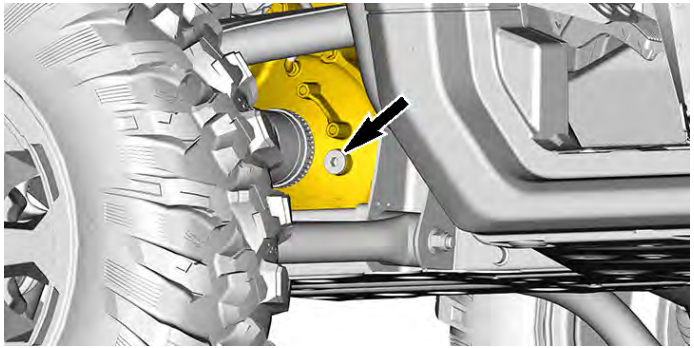

7. Let oil drip completely.
8. Install the drain plug and tighten to specification.

Tightening Torque	
Drain plug	2.5 ± 0.5 Nm (24 ± 4 lbf-**IN**)

9. Refill differential with recommended oil until the level reach the bottom threads of the filler plug hole.

The front differential requires approximately 350 ml (11.83 fl oz (US)) for Quick-4Lok and 475 ml (16 fl oz (US)) for all others.

10. Reinstall the filler plug and tighten it to specification.

Tightening Torque	
Filler plug	16.5 ± 2.5 Nm (146 ± 22 lbf-**IN**)

CVT COVER

For a better understanding, some illustrations are taken with engine out of vehicle. To perform the following instructions, it is not necessary to remove engine.

WARNING

Never touch CVT while engine is running.

Never drive vehicle when CVT cover is removed.

CAUTION

Engine must be cool before cover is removed.

NOTICE

This CVT is lubrication free.

Never lubricate any components except drive pulley bearing and thrust rollers bearing.

CVT Cover – Access

1. Open the cargo box.
2. Remove the LH rear deflector.

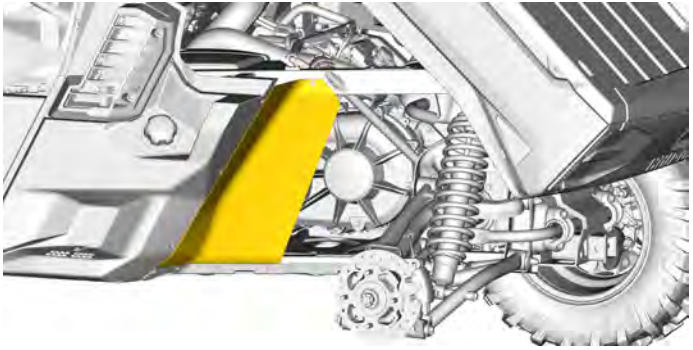

Wheel removed only for clarity purpose

3. The LH rear wheel can also removed to make more room.

CVT Cover – Removal

NOTICE

Do not use an impact tool to remove CVT cover screws.

1. Place the vehicle on a level surface.
2. Open the cargo box.

3. Remove the LH rear deflector.

Wheel removed only for clarity purpose

4. Remove the air intake housing. This step is not necessary but the air intake housing removal will create more room to help CVT cover removal.
5. Remove all CVT cover screws finishing by the center top screw.
6. Remove the CVT cover and its gasket.

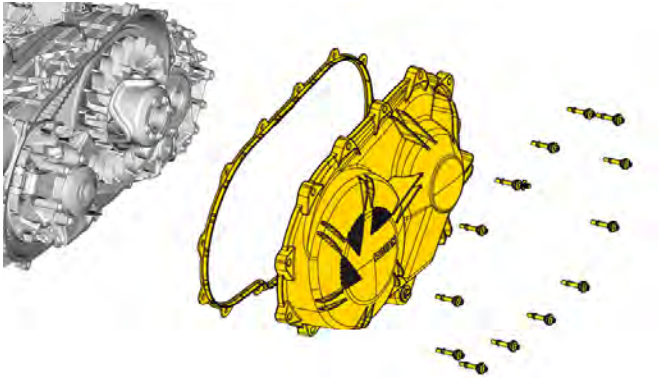

7. Check the CVT outlet hose to make sure there are no debris inside.

CVT Cover – Installation

1. Install the center top screw of first.

2. Tighten the CVT cover screws as per following sequence.

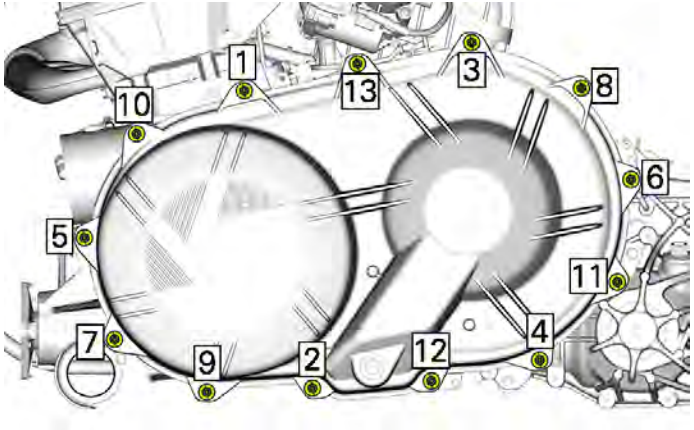

Tightening Torque	
CVT cover screws	7 ± 0.8 Nm (62 ± 7 lbf-**IN**)

3. Reinstall all other removed parts.

DRIVE BELT

Please refer to Drive Belt Durability - Tips for Maximizing, page 3-67 for some important information.

Drive Belt – Removal

NOTICE
In case of a drive belt failure, the CVT housing, the cover, the air outlet and the exhaust manifold heat shield must be cleaned.

The following tools are not provided with the vehicle. Refer to an authorized Can-Am dealer to purchase them.

1. Remove the CVT cover.
2. Screw in the driven pulley adaptor in the driven pulley threaded hole.

Driven pulley adapter **(P/N 708200720)**	

Puller/locking tool **(P/N 529000088)**	

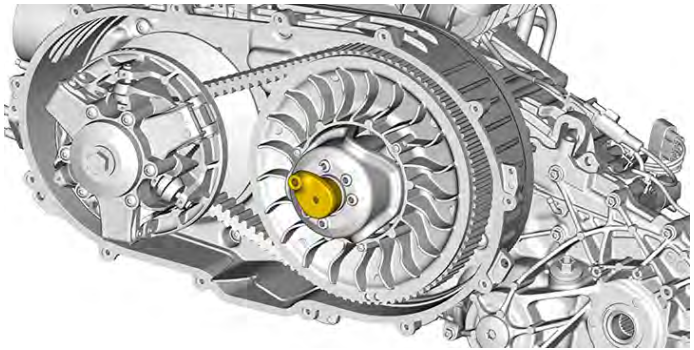

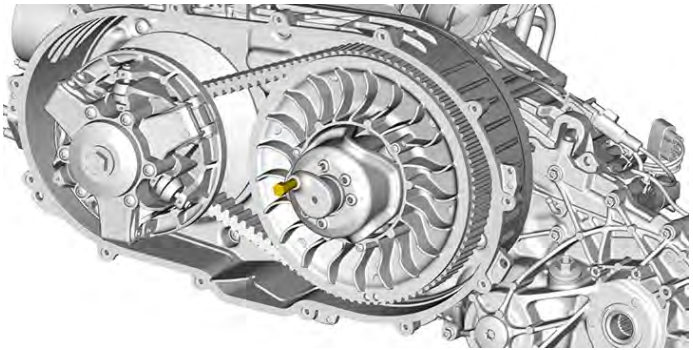

3. Install the puller/locking tool in the driven pulley adaptor threaded hole. Tighten the puller/locking tool to completely open the pulley.

4. To remove belt, slip the belt over the top edge of fixed sheave.

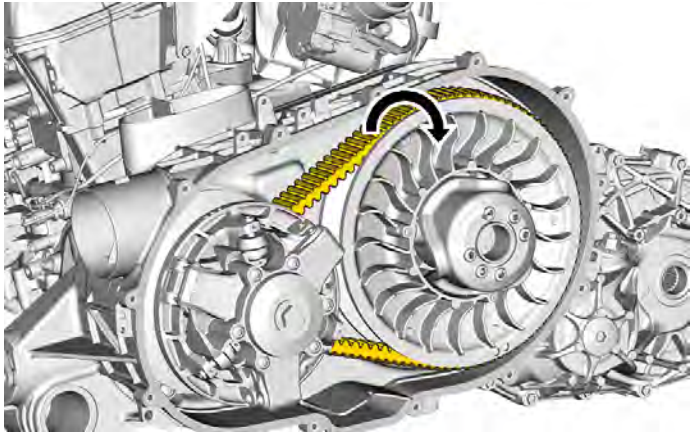

Drive Belt – Installation

NOTICE
The maximum drive belt life span is obtained when the drive belt has the proper rotation direction. Install it so that the arrow printed on belt is pointing towards front of the vehicle, viewed from top.

1. Slide the drive belt in the drive pulley.
2. Insert the drive belt in the bottom of the driven pulley.
3. Slip the drive belt over the top edge of fixed sheave of the driven pulley.

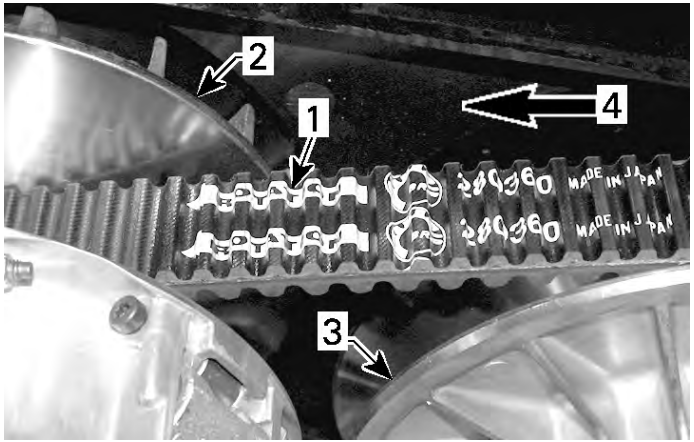

1. Arrow printed on belt
2. Drive pulley (front)
3. Driven pulley (rear)
4. Rotation direction

4. Unscrew and remove the puller/locking tools.

5. Turn the driven pulley until the lowest portion of the cogs on the external surface of the drive belt is even with the driven pulley edge.

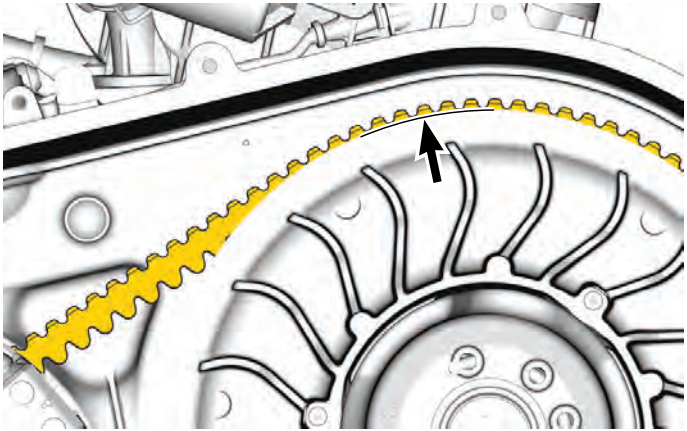

6. Install the CVT cover and all other removed parts.

DRIVE AND DRIVEN PULLEYS

This maintenance, inspection and repair of the CVT pulleys must be performed by an authorized Can-Am dealer, repair shop, or person of your own choosing for maintenance, repair, or replacement.

Drive Pulley – Inspection

1. Inspect the bushings of the sliding sheave and all rollers of the drive pulley, replace worn parts.

Driven Pulley – Inspection

1. Inspect the bushings of the cam and of the sliding sheave of the driven pulley, replace worn parts.

SPARK PLUGS

Spark Plugs – Removal

1. Place the vehicle on a level surface.
2. Open the cargo box.

3. If more working room is required, remove the CVT cooling duct with the LH adaptor.

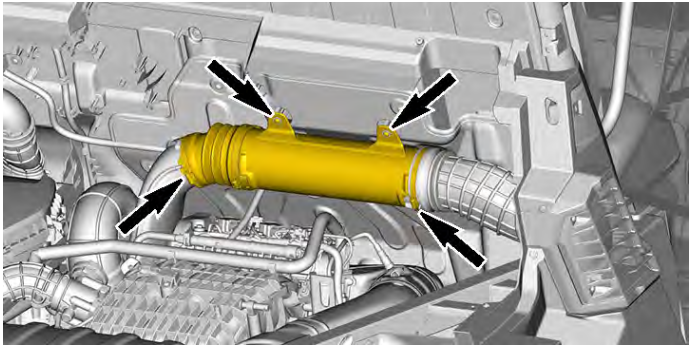

4. Disconnect the ignition coil connectors.

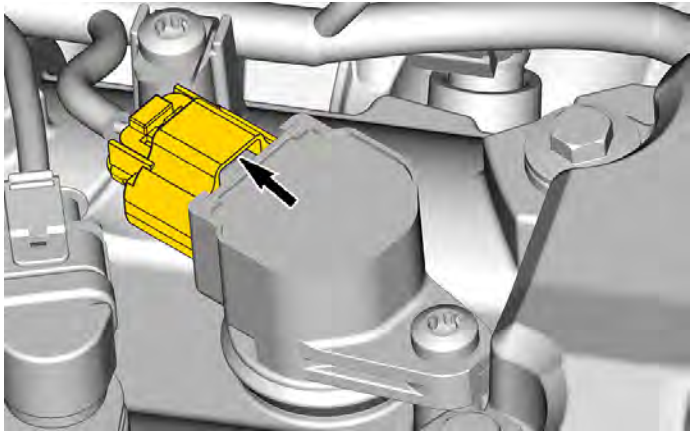

5. Remove the ignition coils screws.

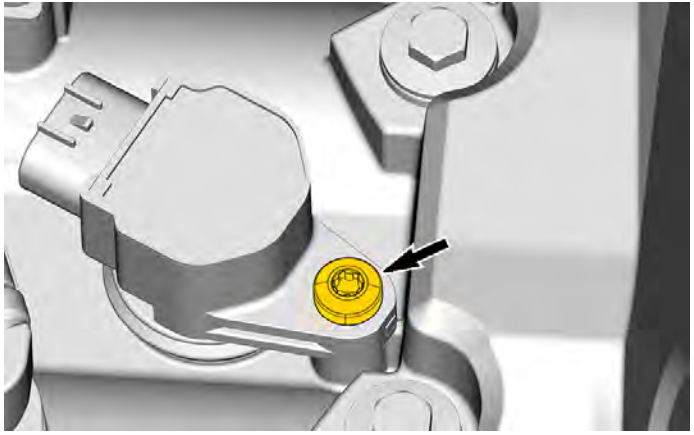

6. Pull and twist the ignition coils both sides to remove them with their gaskets.

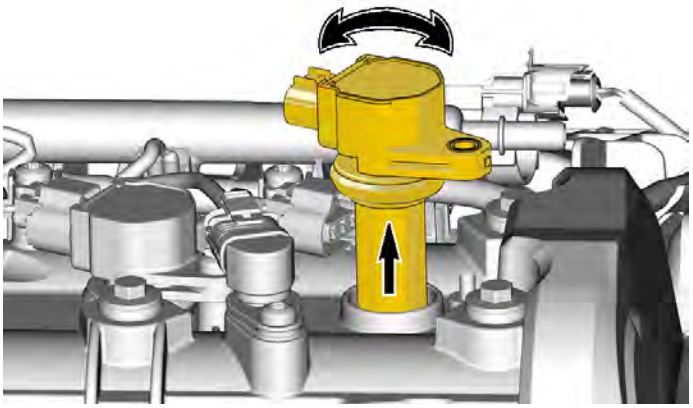

7. Blow spark plug holes and the valve cover with compressed air.
8. Using a 14mm swivel magnetic spark plug socket, unscrew and remove the spark plugs.

Spark Plugs – Installation

1. Prior to installation make sure that contact surface of cylinder head and spark plug is free of grime.

2. Verify the spark plug gap. The gap is not adjustable

Spark Plug Gap (NOT adjustable)
0.7 to 0.8 mm (.028 to .031 in)

3. Screw spark plug into cylinder heads by hand and tighten to specification using a torque wrench.

NOTICE
Do not overtighten spark plugs, engine damage can occur.

Tightening Torque	
Spark plug	11 ± 1 Nm (97 ± 9 lbf-**IN**)

4. Install the ignition coils on the spark plugs.
5. Align the screw hole of the ignition coil with the threaded hole on the valve cover.
6. Push the ignition coils all the way down until it rests against the valve cover.
7. Secure the ignition coils using previously removed screws.

Tightening Torque	
Ignition coil screws	9 ± 1 Nm (80 ± 9 lbf-**IN**)

8. If removed, reinstall the CVT cooling duct.
9. Close the cargo box.

BATTERY

Battery – Maintenance

NOTICE
Never charge a battery while installed in vehicle.

These vehicles are equipped with a VRLA battery (Valve Regulated Lead Acid). It is a maintenance-free type battery, there is no need to add water to adjust electrolyte level.

NOTICE
Never remove the battery sealing cap.

Battery – Removal

The battery is located under the RH passenger seat.

1. If equipped, remove the under seat storage box.

2. Lift the seat, not completely but about 3/4.

NOTE
Lifting the seat completely prevents the battery cover from being removed.

3. Remove the battery cover by unscrewing the two 1/4 turn fasteners.

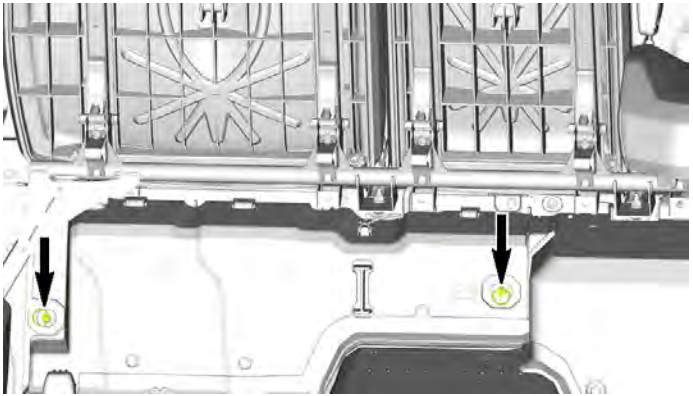

4. Disconnect the BLACK (-) cable first then the RED (+) cable.

NOTICE
Always respect this order for disassembly; disconnect BLACK (-) cable first.

5. Remove the battery holder screws.

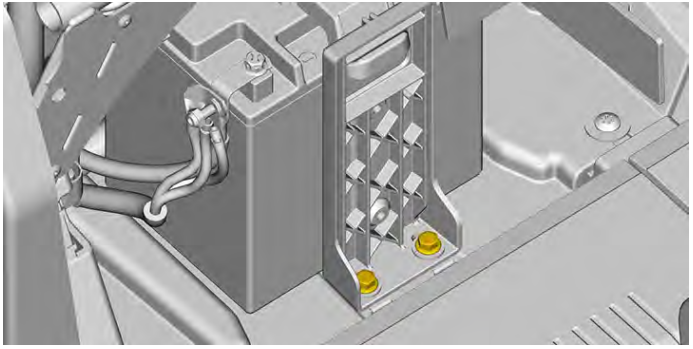

6. Remove the battery holder.
7. Remove the battery.

Battery – Installation

1. Install the battery.
2. Install the battery holder. Ensure that the top part of the holder is properly engaged in its slot.

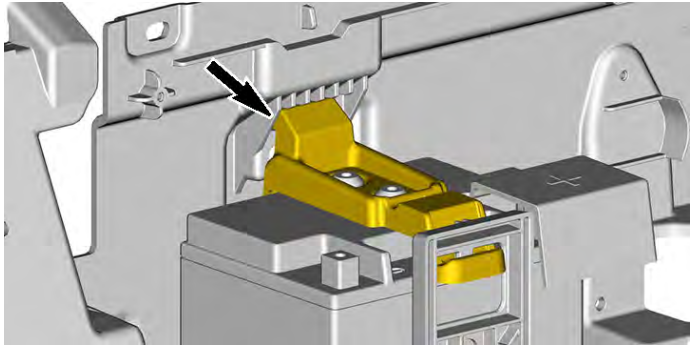

3. Install the battery holder screws.

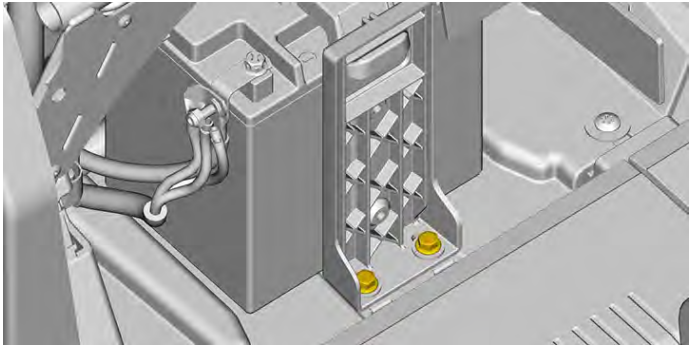

4. Tighten to specification.

Tightening Torque	
Battery holder screws	5.0 ± 1Nm (44 ± 9 lbf-**IN**)

5. Connect the RED (+) cable first then the BLACK (-) cable.

NOTICE
Always respect this order for assembly. Always connect the RED (+) cable first.

6. Tighten to specification.

Tightening Torque	
Battery terminal screws	5.0 ± 0.5 Nm (44 ± 4 lbf-**IN**)

7. Install the battery cover. Secure by screwing the two 1/4 turn fasteners.

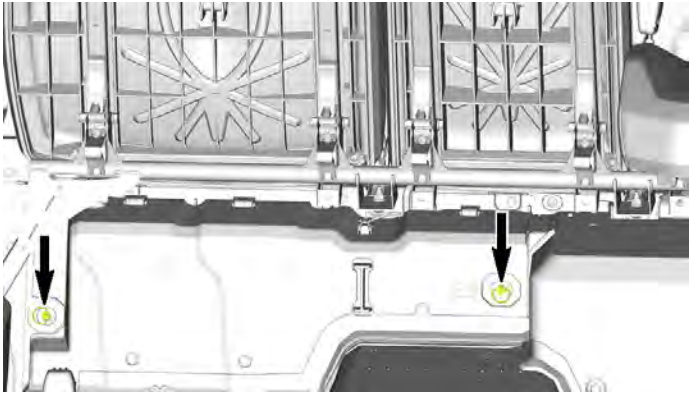

8. If equipped, install the under seat storage box.

FUSES AND FUSIBLE LINKS

Fuses – Replacement

NOTICE
Do not use a higher rated fuse as this can cause severe damage.

1. If a fuse is burnt, replace it by one of the same rating.

Fuse Box – Location

Front Fuse Box

The front fuse box is located under the front hood.

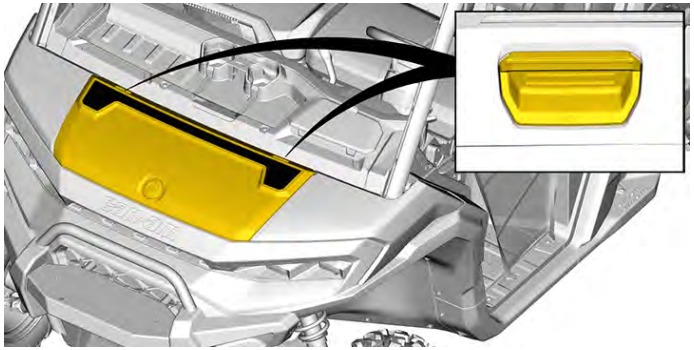

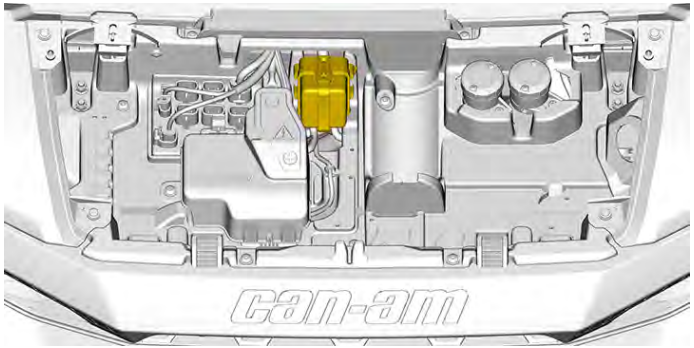

Fuse Holders

The fuse holders are also located under the front hood, beside the front fuse box.

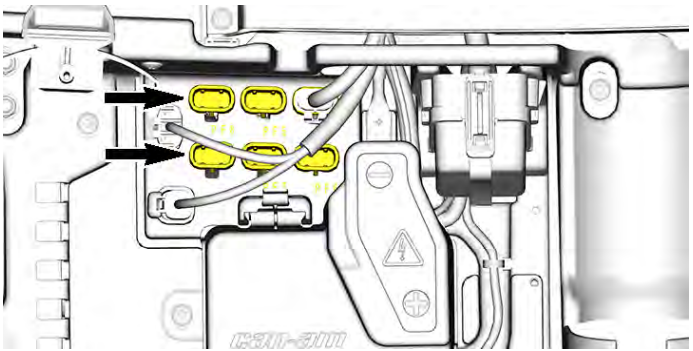

Fusible Links

There are three fusible links on the vehicle. Two of them are attached to the POS (+) post of the battery.

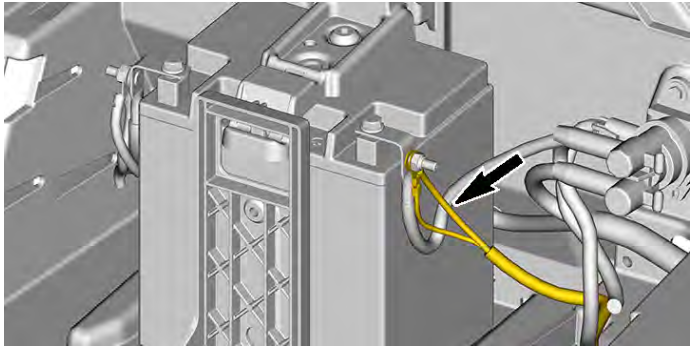

The other one is located under the front hood, attached to the POS (+) post.

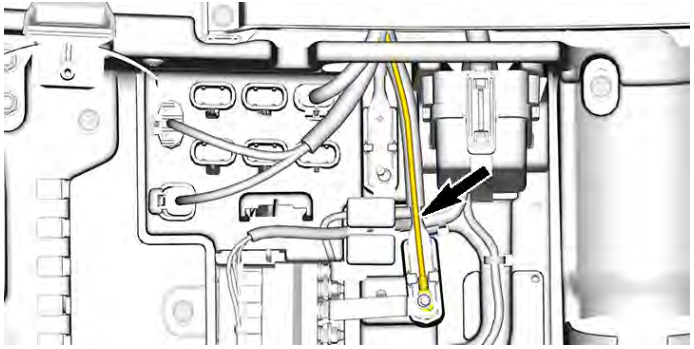

In the event that a fusible link blows, see your Can-Am Off-Road dealer.

Rear Fuse Box

The rear fuse box is located on the rear upper cab panel behind the right passenger's seat.

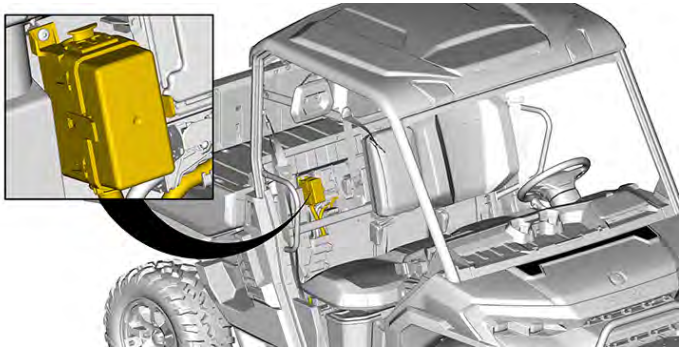

Power Fuse Holder

An additional 50A fuse to protect the voltage regulator is located inside the power harness between the voltage regulator and the battery.

In the event that this fuse burns, see your Can-Am Off-Road dealer.

Fuse Box – Fuses Description

Fuses – Under Front Hood

Under the front hood, the fuse box number is molded on the support.

Under Front Hood		
No	***Description***	***Rating***
PF1	Master fuse box	—
PF3	DPS	40 A
PF5	Air Conditioning (if equipped)	20 A
PF6	ABS pump (if equipped)	40 A
PF7	ABS valve (if equipped)	25 A

Master Fuse Box (PF1) – Under Front Hood

Master Fuse Box		
No	***Description***	***Rating***
F11	Headlamps	15 A
F12	DC outlet	10 A
F13	Signature	5 A
F14	USB outlet	10 A
F20	HVAC fan	25 A
F38	Dash post	30 A
R3	Acc1 relay	—
R4	Headlamp relay	—
R9	Acc2 relay	—

Secondary Fuse Box (PF2)– Behind right passenger seat

Secondary Fuse Box		
No	***Description***	***Rating***
F4	Cluster/relays	10 A
F5	Ignition/injection/fuel pump	10 A
F6	Engine Control Module (ECM)	10 A
F7	2x4 wheel drive actuator	10 A
F8	Key switch/Clock	10 A
F9	Cooling fan (models without HVAC)	30 A
F16	Tail lights	10 A
F19	Cargo	15 A
F36	Roof battery post	50 A
F37	Roof ACC post	30 A
F40	Fan (models with HVAC)	40 A
R1	Cooling fan relay	—

Secondary Fuse Box		
No	***Description***	***Rating***
R2	Main relay	—
R6	ACC Roof relay	—

Fuse Links

Fuse link	Description	Rating
1	Main (BP1)	14 awg
2	Accessory post (Post +)	14 awg
3	Main (BP7)	12 awg

Voltage Regulator Fuse

No	Description	Rating
—	Regulator	50 A

LIGHTS

LED Light

This vehicle is equipped with LEDs (Light Emitting Diode) lights. This technology has proven itself to be very reliable.

In the unlikely event that a light does not work, have it checked by an authorized Can-Am On-road dealer, repair shop or person of your own choosing.

The LEDs are not replaceable separately, replace the module.

Headlight Beam Aiming

1. Open the front hood.

2. Remove the following fasteners.

NOTE
RH side shown below, repeat for LH side.

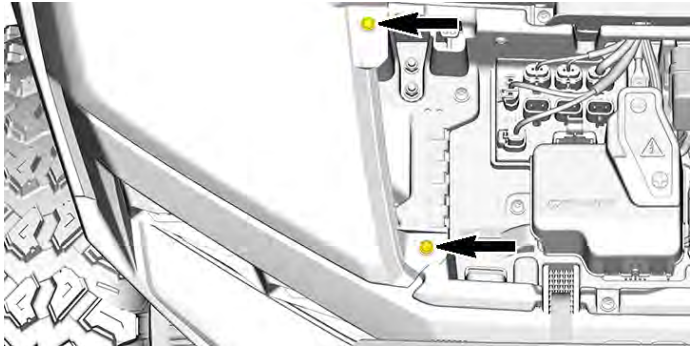

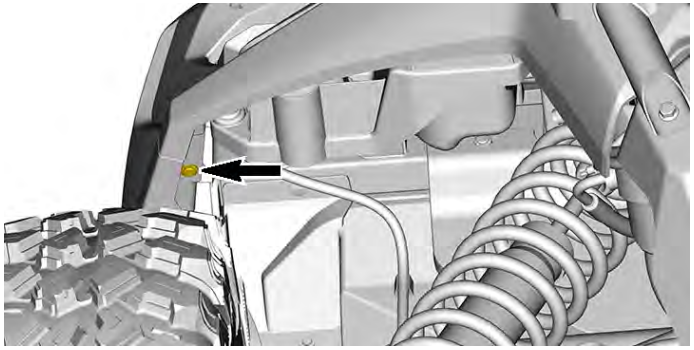

3. Remove the front fender.

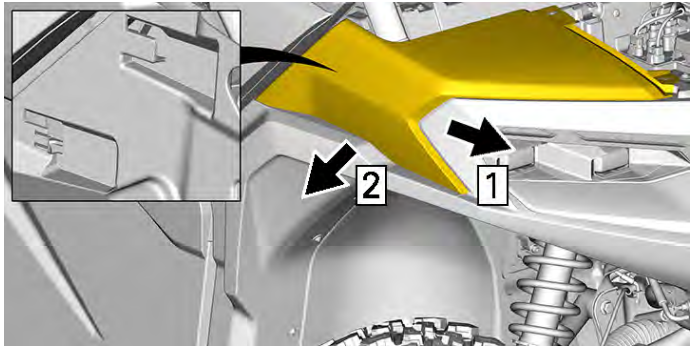

1. Slide forward
2. Remove fender

4. Turn the adjustment screws to adjust the beam height to your convenience. The beam aiming screw is located on the top of the headlight module.

NOTICE
Adjust left and right headlights evenly.

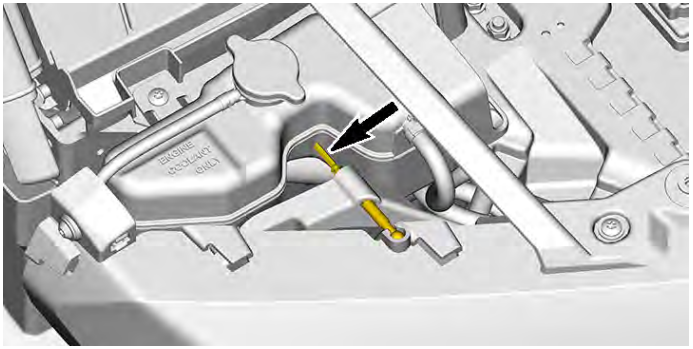

DRIVE SHAFT BELLOWS

Drive Shaft Bellows – Inspection

1. Visually inspect drive shaft bellows condition.

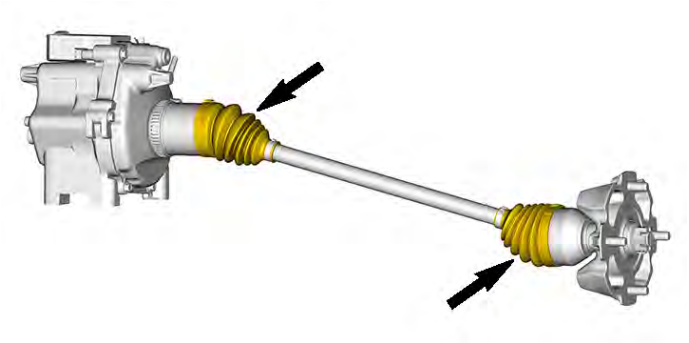

2. Check bellows for cracks, tears, leaking grease, etc.
3. Repair or replace damaged parts as necessary.

WHEEL BEARING

Wheel Bearing – Inspection

1. Lift and support vehicle, refer to Lifting and Supporting the Vehicle, page 3-80.
2. Push and pull the wheels from the upper edge to feel the play.
3. See an authorized Can-Am dealer, a repair shop or a person of your choosing if there is excessive play.

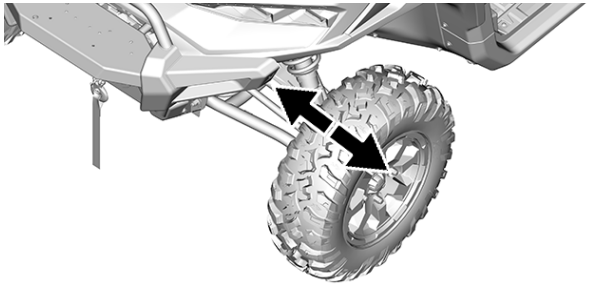

WHEELS AND TIRES

Wheel – Removal

1. Select the 4WD.
2. Place the vehicle on a level surface.
3. Apply and hold the brakes.
4. Put shift lever in **Park**.
5. While holding the brakes, lift lever toward the steering wheel.

6. Loosen the wheel lug nuts.
7. Lift and support vehicle, refer to Lifting and Supporting the Vehicle, page 3-80 .
8. Remove lug nuts and wheel.

Wheel – Installation

1. Make sure the wheel studs are free of any dirt or metal chips.

WARNING
Do not use any type of lubricant on the studs or lug nut threads before tightening.

2. Lift the wheel onto the studs.
3. Install the wheel lug nuts and tighten by hand until snug.

NOTICE
Always use the recommended wheel lug nuts for the type of wheel. Using a different lug nut could cause damages to the rim or studs.

4. Tighten to the specified torque, using the sequence shown below. To stop the wheels from spinning while torquing, engage the brake locking lever.

Tightening Torque	
Wheel lug nuts	Step 1: 25 ± 10 Nm (18.5 ± 7.5 lbf-ft)
	Step 2: 120 ± 10 Nm (88.5 ± 7.5 lbf-ft)

Tire – Pressure Verification

WARNING

Tire pressure greatly affects vehicle handling and stability.

Insufficient pressure may cause tire to deflate and rotate on wheel.

Overpressure may burst the tire. Always follow recommended pressure.

NEVER set tire pressure below minimum. It could cause the tire to dislodge from the rim.

Check pressure when tires are **cold** before using the vehicle. Tire pressure changes with temperature and altitude. Recheck pressure if one of these conditions has changed.

Refer to the *Tires Pressure and Maximum Load Label* on your vehicle for applicable pressure.

NOTE

In the event of a flat tire, it is recommended to carry a tire gauge, tire pump and a repair kit.

Tire – Inspection

1. Check tire for damage and wear. Replace if necessary.

Tire – Replacement

Tire replacement should be performed by an authorized Can-Am dealer, a repair shop or a person of your choosing.

WARNING

Replace tires only with the same type and size as original tires.

For unidirectional tread pattern, ensure that the tires are installed in the correct direction of rotation.

Tires should be replaced, by an experienced person, in accordance with tire industry standards and tools.

SUSPENSION

See an authorized Can-Am dealer, a repair shop or a person of your choosing if any problem is detected.

Front Suspension Arms – Inspection

1. Check suspension arms for cracks, bending or other damages.
2. Re-tighten the front of the suspension arms by the nuts to specifications at ride height.

NOTICE

To avoid suspension bushings damages, never lift the vehicle from the ground to re-tighten suspension arm fasteners.

Tightening Torque	
Front suspension arm nuts	112.5 ± 7.5 Nm (83 ± 5.5 lbf-ft)

3. Re-tighten the rear of the suspension arms by the bolts to specifications at ride height.

Tightening Torque	
Front suspension arm bolts	112.5 ± 7.5 Nm (83 ± 5.5 lbf-ft)

Rear Suspension Arms – Inspection

1. Check suspension arms for cracks, bending or other damages.
2. Re-tighten the suspension arms by nuts to specifications at ride height.

NOTICE
To avoid suspension bushings damages, never lift the vehicle from the ground to re-tighten suspension arm fasteners.

Tightening Torque	
Rear suspension arm nuts	112.5 ± 7.5 Nm (83 ± 5.5 lbf-ft)

Shock Absorbers – Inspection

1. Inspect shock absorber for leaks, bump stop wear out or other damages.
2. Inspect both upper and lower bushings condition.
3. Verify if fasteners are still well tightened.

Tightening Torque	
Shock absorber nuts	102.5 ± 7.5 Nm (83 ± 5.5 lbf-ft)

Stabilizer Bar – Inspection

1. Check stabilizer bars for cracks, bending or, other damaged.
2. Check also the stabilizer bar bushings for damages.
3. Replace components if required.

BRAKES

Brake Fluid – Level Check

1. Place the vehicle on a level surface.
2. Open the front hood.

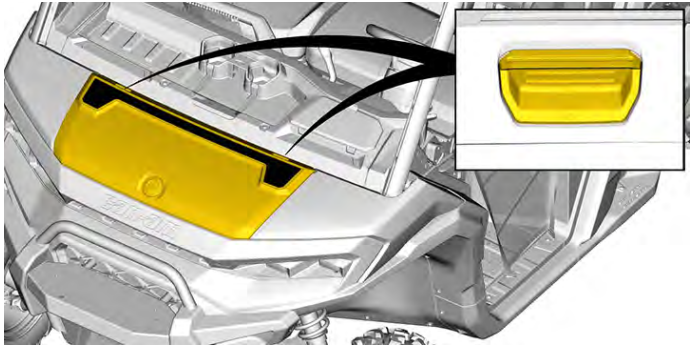

3. Locate the brake fluid reservoirs.

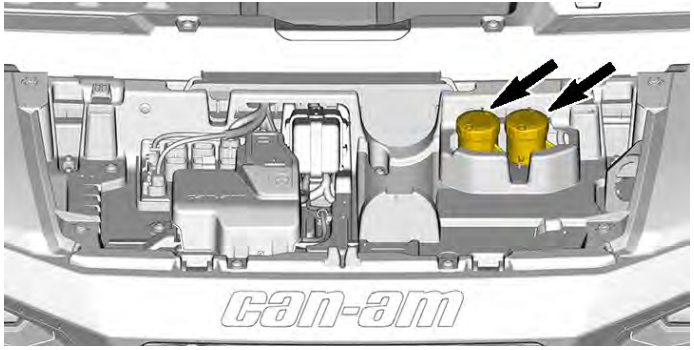

4. Using the marks on the brake fluid reservoirs, check the fluid level. The proper level should be between the MIN and MAX lines.

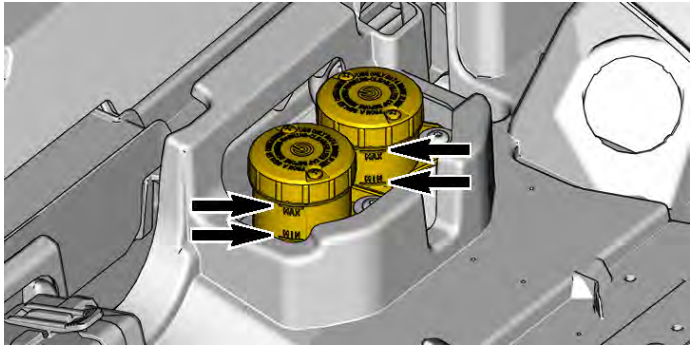

NOTE
A low fluid level may indicate a leak or worn brake pads.

Brake Fluid – Level Adjustment

1. Clean filler cap before removing.
2. Add fluid as required. **Do not overfill.**
3. Close filler cap and tighten its screws to specification.

NOTICE
Ensure filler cap diaphragm is pushed inside the cap before closing the brake fluid reservoir.

Tightening Torque	
Filler cap screws	0.7 ± 0.1 Nm (6.2 ± 0.8 lbf-IN)

Brake Fluid – Recommended Type

Always use brake fluid meeting the specification DOT 4 only.

NOTICE
To avoid serious damage to the braking system, do not use fluids other than the recommended one, nor mix different fluids for topping up. Do not use brake fluid taken from old or already opened containers.

Brake System – Inspection

WARNING

The brake fluid replacement or brake system maintenance and repairs should be performed by an authorized Can-Am dealer.

1. Verify the following between visits to your dealer:

- Brake fluid level
- Brake system for fluid leaks
- Brake pads wear
- Brake discs condition
- Brake cleanliness.

SEAT BELTS

Seat Belt – Cleaning

WARNING

To avoid damaging the seat belt components, never use a pressure washer to clean them.

NOTICE

Do not use bleach, dye, or household detergents.

1. To clean dirt and debris from the seat belts, sponge the straps with mild soap and water.

SIDE NETS (if equipped)

Side Nets – Inspection

1. Buckle the side nets in place.
2. Check all straps and the net for damages.
3. If a damage is detected, see an authorized Can-Am dealer to have the side net replaced.

DOORS (if equipped)

Door Latch Mechanism – Lubrication

1. Lubricate door latch mechanisms (lock and hinges) periodically using a silicone based lubricant.

NOTICE

Never apply any type of grease on door lock mechanism.

CAGE

Cage - Fasteners Tightening Verification

1. Remove the front fender and the side cage cover to get access to the fasteners.

NOTE
LH side shown, repeat on RH side.

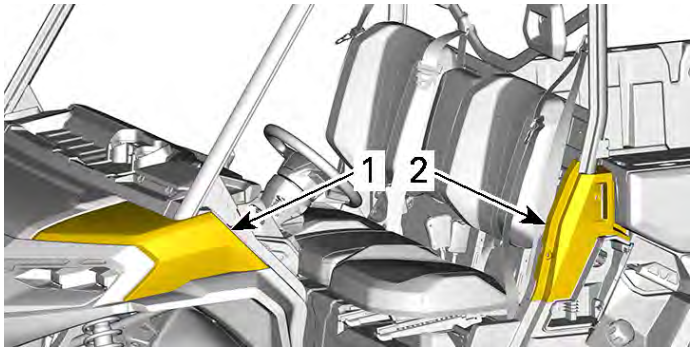

1. Front fender
2. Side cage cover

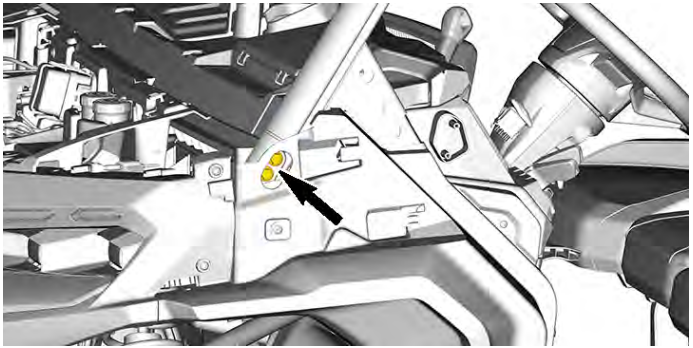

Front

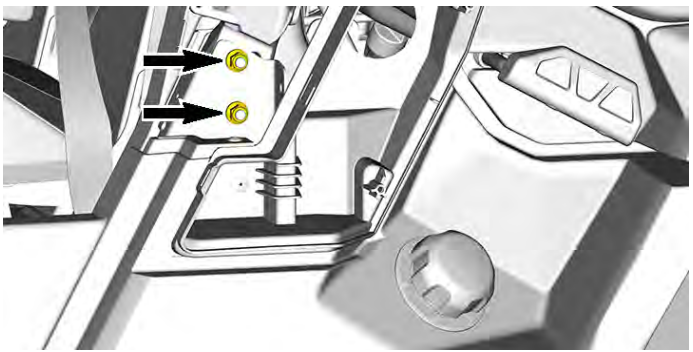

Rear

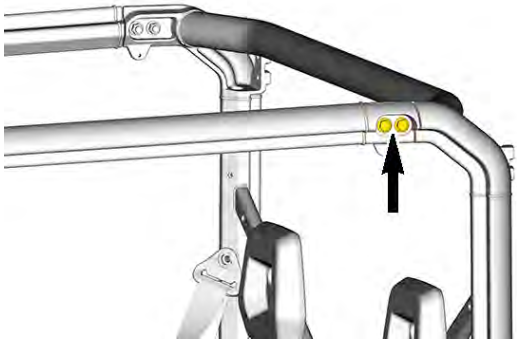

Top

2. Tighten to specification.

Tightening Torque	
Cage fasteners	67.5 ± 2.5 N·m (50 ± 2 lbf·ft)

Vehicle – Cleaning and Protection

Pay attention to certain areas where salt-water, mud or debris can accumulate and potentially cause:

- Fire
- Wear
- Interference
- Corrosion.

WARNING

Debris accumulation could lead to a vehicle fire when the exhaust system is hot and the debris are dried.

In some cases, that could result in serious properly damages, injuries or even death.

Clean often and regularly the area surrounding the exhaust system when riding in swamp, bog, hay or dead leaves.

In other situations, clean as per maintenance schedule requirement.

NOTICE

Never use a high pressure washer to clean the vehicle. **USE LOW PRESSURE ONLY (like a garden hose).**

High pressure can cause damage to electrical or mechanical components.

When vehicle is used in salt-water environment rinsing the vehicle with fresh water is necessary to preserve vehicle and its components after each operating day.

This list includes but is not limited to:

- Around exhaust system and between muffler and muffler cover
- Under and around the fuel tank
- Radiator
- Shock absorbers
- Around front and rear differentials
- Around and underneath engine and gearbox
- Inside wheels
- On top of skid plates.

Metallic parts lubrication is highly recommended.

Painted parts which are damaged should be properly repainted to prevent rust.

When required, wash the body with warm water and soap (only use mild detergent). Apply non-abrasive wax.

NOTICE

Never clean plastic parts with strong detergent, degreasing agent, paint thinner, acetone, etc.

Protect the vehicle with a cover to prevent dust accumulation during storage.

NOTICE

The vehicle has to be stored in a cool and dry place and covered with an opaque tarpaulin. This will prevent sun rays and grime from affecting plastic components and vehicle finish.

STORAGE AND PRESEASON PREPARATION

When a vehicle is not in use for more than 4 months, proper storage is a necessity.

If the vehicle is to be remain inactive for more than 21 days, disconnect the BLACK (-) cable of the battery.

The use of a low amperage trickle charger is recommended to keep battery fully charged.

Before using your vehicle after storage, a preparation is required.

See an authorized Can-Am dealer, a repair shop, or a person of your own choosing to have your vehicle prepared properly.

5 TECHNICAL INFORMATION - TABLE OF CONTENTS

VEHICLE IDENTIFICATION. 5-2
Vehicle Identification Number (VIN) 5-2
Engine Identification Number (EIN) 5-3
Gearbox Identification Number (GIN). 5-3

TECHNICAL INFORMATION LABELS 5-4

COMPLIANCE LABELS. 5-6

BRP RF DESS POST GEN3 (CAN) 5-11

EVAPORATIVE EMISSION CONTROL SYSTEM 5-22

NOISE EMISSION CONTROL SYSTEM REGULATION 5-23

NOISE EMISSION AND VIBRATION VALUES (MACHINERY DIRECTIVE 2006/42/EC COMPLIANCE MODELS) 5-24

DECLARATION OF CONFORMITY 5-25

EAC DECLARATION OF CONFORMITY 5-27

VEHICLE IDENTIFICATION

The main components of your vehicle (engine and frame) are identified by different serial numbers. It may sometimes become necessary to locate these numbers for warranty purposes or to trace your vehicle in the event of loss. These numbers are required by the authorized Can-Am dealer to complete warranty claims properly. We strongly recommend that you take note of all the serial numbers on your vehicle and supply them to your insurance company.

Vehicle Identification Number (VIN)

The VIN decal is located inside the cockpit, on the right wall under the glove box.

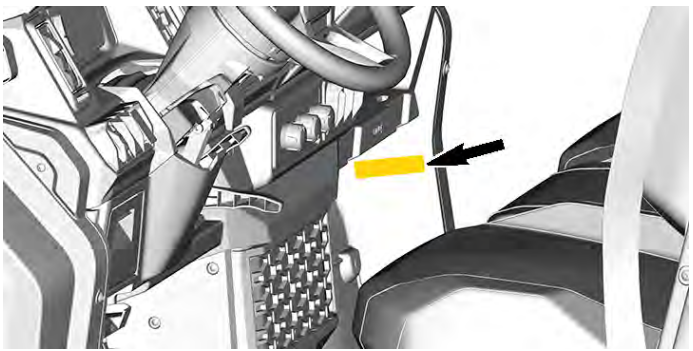

Engine Identification Number (EIN)

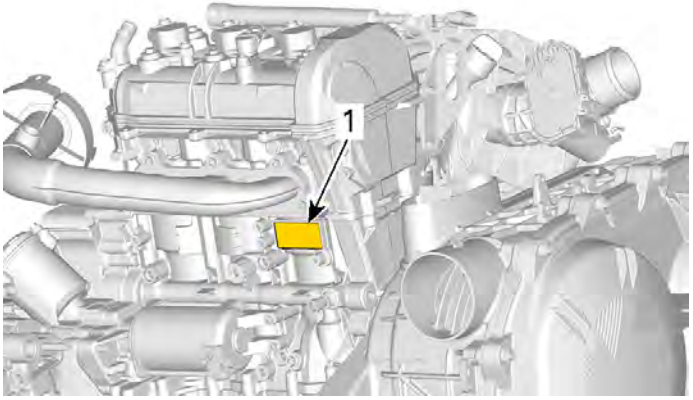

1. Engine Identification Number (EIN) location

Gearbox Identification Number (GIN)

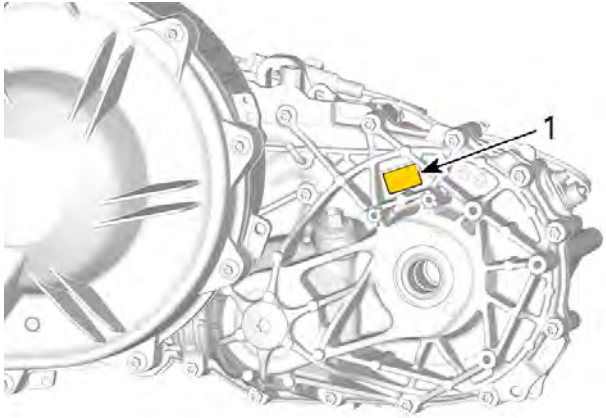

1. Gearbox Identification Number (GIN) location

TECHNICAL INFORMATION LABELS

HVAC Information Label

This decal is located under in the RH front wheel arch and the front hood.

READ THE REPAIR MANUAL BEFORE SERVICING
Type of refrigerant: R-134A
Refrigerant filling capacity: 595 g (21 oz)
Oil type: PAG
Safety Standards for Motor Vehicle Refrigerant Vapor Compressions Systems: SAE J639

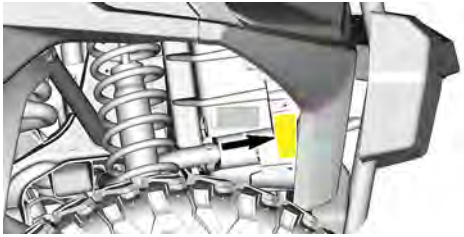

RH Side

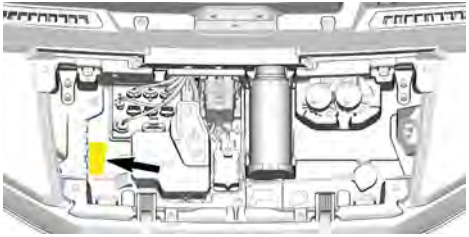

Middle Seat Opening Pictogram

This pictogram is located near the locking tab of the middle seat.

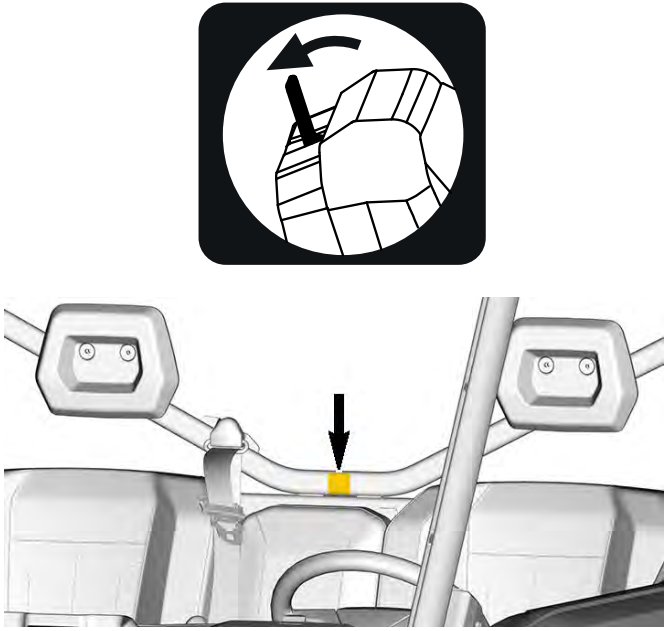

Air Filter Maintenance

On engine air filter housing

NOTICE

Refer to Operator's Guide for air filter maintenance schedule and instructions.

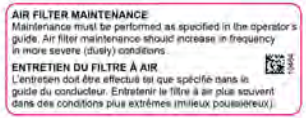

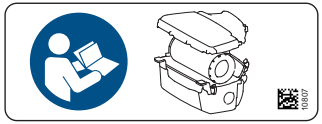

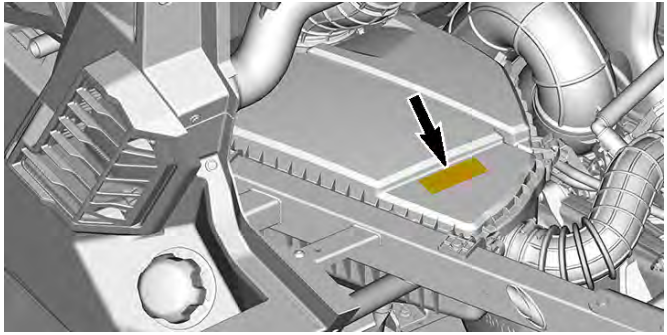

5

COMPLIANCE LABELS

Emission Control Information

CARB	
	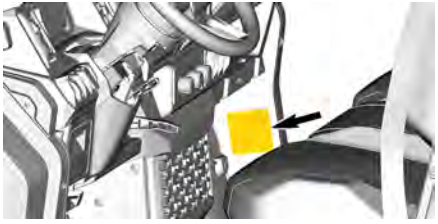

Other Models	
	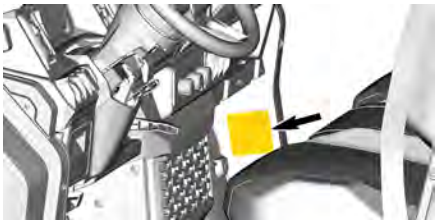

ANSI/ROHVA Label

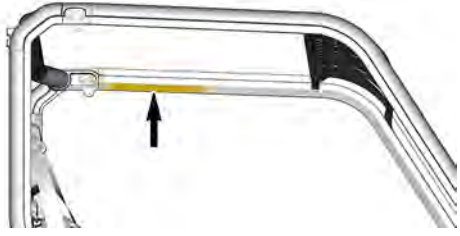

NRMM Comformity Label

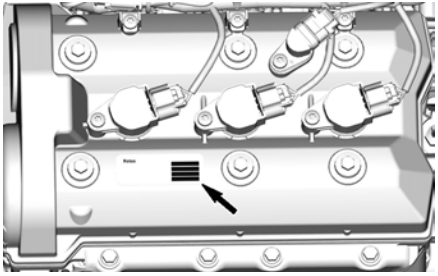

Fuel Ethanol Content

This label is located near the gas cap.

BRP RF DESS POST GEN3 (CAN)

USA and Canada

This device complies with FCC Part 15 and Industry Canada license exempt RSS standard(s). Operation is subject to the following two conditions:

1. this device may not cause interference, and
2. this device must accept any interference, including interference that may cause undesired operation of the device.

This equipment has been tested and found to comply with the limits for a Class B digital device, pursuant to part 15 of the FCC Rules. These limits are designed to provide reasonable protection against harmful interference in a residential installation. This equipment generates, uses and can radiate radio frequency energy and, if not installed and used in accordance with the instructions, may cause harmful interference to radio communications. However, there is no guarantee that interference will not occur in a particular installation. If this equipment does cause harmful interference to radio or television reception, which can be determined by turning the equipment off and on, the user is encouraged to try to correct the interference by one or more of the following measures:

- Reorient or relocate the receiving antenna.
- Increase the separation between the equipment and receiver.
- Connect the equipment into an outlet on a circuit different from that to which the receiver is connected.
- Consult the dealer or an experienced radio/TV technician for help.

The device has been evaluated to meet general RF exposure requirement. The device can be used in portable exposure condition without restriction.

Le dispositif a été évalué à satisfaire l’exigence générale de l’exposition aux rf. L’appareil peut être utilisé dans des conditions d’exposition portatif sans restriction.

L’émetteur/récepteur exempt de licence contenu dans le présent appareil est conforme aux CNR d’Innovation, Sciences et Développement économique Canada applicables aux appareils radio exempts de licence.

1. l'appareil ne doit pas produire de brouillage, et
2. l'appareil doit accepter tout brouillage radioélectrique subi, même si le brouillage est susceptible d'en compromettre le fonctionnement.

Changes or modifications not expressly approved by the party responsible for compliance could void the user's authority to operate the equipment.

IC: 12006A-1001317030 For variant 1001316154 (CAN)

FCC ID: 2ACER 1001317030 For variant 1001316154 (CAN)

Mexico

IFETEL

Marca: BRP Megatech

Número: BRME1023-28186

BRP Megatech Certificate number: 1450978

Modelo: 1001316154

NOM-208-SCFI-2016 (Disposición Técnica IFT-008-2015)

La operación de este equipo está sujeta a las siguientes dos condiciones:

1. Es posible que este equipo o dispositivo no cause interferencia perjudicial y
2. Este equipo o dispositivo debe aceptar cualquier interferencia, incluyendo la que pueda causar su operación no deseada.

Brazil

Número: 05254-23-15603

BRP Megatech Certificate number: 1450991

Modelo: 1001316154

Este equipamento não tem direito à proteção contra interferência prejudicial e não pode causar interferência em sistemas devidamente autorizados. Para maiores informações, consulte o site da ANATEL.

Japan

This device is granted pursuant to the Japanese Radio Law (電波法) and the Japanese Telecommunications Business Law (電気通信事業法). This device should not be modified (otherwise the granted designation number will become invalid).

Europe

Declaration of Conformity

Simplified EU Declaration of Conformity according Radio Equipment Directive 2014/ 53/EU

DE

Hiermit erklärt BRP Megatech, dass der Funkanlagentyp 1001316154 der Richtlinie 2014/53/EU entspricht. Der vollständige Text der EU-Konformitätserklärung ist unter der folgenden Internetadresse verfügbar: https://www. brp. com/en/corporatesocialresponsibility/productsafety.html

FR

Le soussigné, BRP Megatech, déclare que l'équipement radioélectrique du type 1001316154 est conforme à la directive 2014/53/UE. Le texte complet de la déclaration UE de conformité est disponible à l'adresse internet suivante: https://www. brp. com/en/corporatesocialresponsibility/productsafety.html

BG

С настоящото BRP Megatech декларира, че този тип радиосъоръжение 1001316154 е в съответствие с Директива 2014/53/ЕС.

Цялостният текст на ЕС декларацията за съответствие може да се намери на следния интернет адрес: https://www.brp.com/en/corporatesocialresponsibility/productsafety.html

EL

Με την παρούσα ο/η BRP Megatech, δηλώνει ότι ο ραδιοεξοπλισμός 1001316154 πληροί την οδηγία 2014/53/EE. Το πλήρες κείμενο της δήλωσης συμμόρφωσης ΕΕ διατίθεται στην ακόλουθη ιστοσελίδα στο διαδίκτυο: https://www. brp. com/en/corporatesocialresponsibility/productsafety.html

CS

Tímto BRP Megatech prohlašuje, že typ rádiového zařízení 1001316154 je v souladu se směrnicí 2014/53/EU. Úplné znění EU prohlášení o shodě je k dispozici na této internetové adrese: https://www.brp.com/en/corporatesocialresponsibility/productsafety.html

DA

Hermed erklærer BRP Megatech, at radioudstyrstypen 1001316154 er i overensstemmelse med direktiv 2014/53/EU.

EU-overensstemmelseserklæringens fulde tekst kan findes på følgende internetadresse: https://www. brp. com/en/corporatesocialresponsibility/productsafety.html

ET

Käesolevaga deklareerib BRP Megatech, et käesolev raadioseadme tüüp 1001316154 vastab direktiivi 2014/53/EL nõuetele.

ELi vastavusdeklaratsiooni täielik tekst on kättesaadav järgmisel internetiaadressil: https://www.brp.com/en/corporatesocialresponsibility/productsafety.html

ES

Por la presente, BRP Megatech declara que el tipo de equipo radioeléctrico 1001316154 es conforme con la Directiva 2014/53/UE.

El texto completo de la declaración UE de conformidad está disponible en la dirección Internet siguiente: https://www. brp. com/en/corporatesocialresponsibility/productsafety.html

FI

BRP Megatech vakuuttaa, että radiolaitetyyppi 1001316154 on direktiivin 2014/53/EU mukainen. EU-vaatimustenmukaisuusvakuutuksen täysimittainen teksti on saatavilla seuraavassa internetosoitteessa: https://www. brp. com/en/corporatesocialresponsibility/productsafety.html

EN

Hereby, BRP Megatech declares that the radio equipment type 1001316154 is in compliance with Directive 2014/53/EU. The full text of the EU declaration of conformity is available at the following internet address: https://www. brp. com/en/corporatesocialresponsibility/product-safety.html

HR

BRP Megatech ovime izjavljuje da je radijska oprema tipa 1001316154 u skladu s Direktivom 2014/53/EU. Cjeloviti tekst EU izjave o sukladnosti dostupan je na sljedećoj internetskoj adresi:https://www.brp.com/en/corporate-social-responsibility/productsafety.html

HU

BRP Megatech igazolja, hogy a 1001316154 típusú rádióberendezés megfelel a 2014/53/EU irányelvnek. Az EU-megfelelőségi nyilatkozat teljes szövege elérhető a következő internetes címen: https://www. brp. com/en/corporate-socialresponsibility/productsafety.html

IT

Il fabbricante, BRP Megatech, dichiara che il tipo di apparecchiatura radio 1001316154 è conforme alla direttiva 2014/53/UE.

Il testo completo della dichiarazione di conformità UE è disponibile al seguente indirizzo Internet: https://www. brp. com/en/corporate-socialresponsibility/productsafety.html

LT

Aš, BRP Megatech, patvirtinu, kad radijo įrenginių tipas 1001316154 atitinka Direktyvą 2014/53/ES. Visas ES atitikties deklaracijos tekstas prieinamas šiuo interneto adresu:https://www.brp.com/en/corporate-social-responsibility/productsafety.html

LV

Ar šo BRP Megatech deklarē, ka radioiekārta 1001316154 atbilst Direktīvai 2014/53/ES. Pilns ES atbilstības deklarācijas teksts ir pieejams šādā interneta vietnē:https://www.brp.com/en/corporate-social-responsibility/productsafety.html

MT

B'dan, BRP Megatech, niddikjara li dan it-tip ta' tagħmir tar-radju 1001316154 huwa konformi mad-Direttiva 2014/53/UE. It-test kollu tad-dikjarazzjoni ta' konformità tal-UE huwa disponibbli f'dan l-indirizz tal-Internet li ġej: https://www.brp.com/en/corporatesocialresponsibility/productsafety.html

NL

Hierbij verklaar ik, BRP Megatech, dat het type radioapparatuur 1001316154 conform is met Richtlijn 2014/53/EU.

De volledige tekst van de EU-conformiteitsverklaring kan worden geraadpleegd op het volgende internetadres: https://www.brp.com/en/corporatesocialresponsibility/productsafety.html

PL

BRP Megatech niniejszym oświadcza, że typ urządzenia radiowego 1001316154 jest zgodny z dyrektywą 2014/53/UE. Pełny tekst deklaracji zgodności UE jest dostępny pod następującym adresem internetowym: https://www.brp.com/en/corporatesocialresponsibility/productsafety.html

PT

O(a) abaixo assinado(a) BRP Megatech declara que o presente tipo de equipamento de rádio 1001316154 está em conformidade com a Diretiva 2014/53/UE.

O texto integral da declaração de conformidade está disponível no seguinte endereço de Internet: https://www. brp. com/en/corporatesocialresponsibility/productsafety.html

RO

Prin prezenta, BRP Megatech declară că tipul de echipamente radio 1001316154 este în conformitate cu Directiva 2014/53/UE. Textul integral al declaratiei UE de conformitate este disponibil la următoarea adresă internet: https://www. brp. com/en/corporatesocialresponsibility/productsafety.html

SV

Härmed försäkrar BRP Megatech att denna typ av radioutrustning 1001316154 överensstämmer med direktiv 2014/53/EU. Den fullständiga texten till EU-försäkran om överensstämmelse finns på följande webbadress: https://www. brp. com/en/corporatesocialresponsibility/productsafety.html

SL

BRP Megatech potrjuje, da je tip radijske opreme 1001316154 skladen z Direktivo 2014/53/EU. Celotno besedilo izjave EU o skladnosti je na voljo na naslednjem spletnem naslovu: https://www.brp.com/en/corporatesocialresponsibility/productsafety.html

SK

BRP Megatech týmto vyhlasuje, že rádiové zariadenie typu 1001316154 je v súlade so smernicou 2014/53/EÚ. Úplné EÚ vyhlásenie o zhode je k dispozícii na tejto internetovej adrese: https://www.brp.com/en/corporatesocialresponsibility/productsafety.html

IS

BRP Megatech lýsir því hér með yfir að þráðlausi fjarskiptabúnaðurinn 1001316154 er í samræmi við tilskipun 2014/53/ESB. Óstyttan texta ESB-samræmisyfirlýsingarinnar er að finna á veffanginu: https://www.brp.com/en/corporatesocialresponsibility/productsafety.html

Liechtenstein

Hiermit erklärt BRP Megatech, dass der Funkanlagentyp 1001316154 der Richtlinie 2014/53/EU entspricht. Der vollständige Text der EU-Konformitätserklärung ist unter der folgenden Internetadresse verfügbar: https://www. brp. com/en/corporatesocialresponsibility/productsafety.html

NO

Hermed erklærer BRP Megatech at radioutstyrstypen 1001316154 er i samsvar med direktiv 2014/53/EU. Hele teksten i EU-samsvarserklæringen finnes på følgende internettadresse: https://www.brp.com/en/corporatesocialresponsibility/productsafety.html

RU

Компания BRP Megatech настоящим заявляет, что радиотехническое оборудование категории 1001316154 отвечает требованиям Директивы 2014/53/EU.

Полный текст декларации соответствия ЕС доступен на сайте : https://www. brp. com/en/corporatesocialresponsibility/productsafety. html

EVAPORATIVE EMISSION CONTROL SYSTEM

California Models with Evaporative Emission Control System

Beginning with the 2018 model-year vehicles, some California models are certified to meet the CARB (California Air Resources Board) TP-933. These models are equipped with an evaporative emission control system consisting of a low permeation fuel tank (LPFT), low permeation fuel lines (LPFL) and an actively purged carbon canister.

The following statement is required by the CCR (California Code of Regulation): An add-on or modified part must be compliant with applicable ARB evaporative emission control standards. A violation of this requirement is punishable by civil and/or criminal punishment.

NOISE EMISSION CONTROL SYSTEM REGULATION

USA and Canada Only

Tampering with Noise Control System Is Prohibited!

U.S. Federal law and Canadian provincial laws may prohibit the following acts or the causing there of:

1. The removal or rendering inoperative by any person other than for purposes of maintenance, repair or replacement of any device or element of design incorporated into any new vehicle for the purpose of noise control prior to its sale or delivery to the ultimate purchaser or while it is in use or
2. The use of the vehicle after such device or element of design has been removed or rendered inoperative by any person.

Among those Acts Presumed to Constitute Tampering Are the Acts Listed Below:

1. Removal or alteration or the puncturing of the muffler or any engine component which conducts removal of engine exhaust gases.
2. Removal or alteration or the puncturing of any part of the intake system.
3. Replacing any moving parts of the vehicle or parts of the exhaust or intake system, with parts other than those specified by the manufacturer.
4. Lack of proper maintenance.

NOISE EMISSION AND VIBRATION VALUES (MACHINERY DIRECTIVE 2006/42/EC COMPLIANCE MODELS)

Noise emission and vibration values are measured in accordance with Machinery Directive 2006/42/EC on a paved surface, at neutral or without belt.

ENGINE		HD11
Noise	Sound Pressure Level (L_{pA})	78 dB (A) (Uncertainty (K_{pA}) 3dB)
	Sound Power Level (L_{wA})	Not Applicable
Vibration	Hand-arm system	Less than 2.5 m/s^2
	Whole body at seat	Less than 0.5 m/s^2

DECLARATION OF CONFORMITY

EU Declaration of Conformity

505 de la Montagne Street
Valcourt (Québec) J0E 2L0
Canada

www.brp.com

EU Declaration of Conformity

Authorized Representative: BRP-Rotax GmbH Co. KG, Rotaxstrasse 1, Gunskirchen, A-4623 Austria

This declaration of conformity is issued under the sole responsibility of the manufacturer.

The undersigned, representing the manufacturer, hereby declares that model year **2026 Side by Side Vehicles** marked with the CE mark and a 17-character vehicle identification number (VIN) structured as **3JBxxxxxxTxxxxxxx** under commercial names **Can-Am Traxter**, **Can-Am Maverick Sport**, **Can-Am Maverick**, and **Can-Am Maverick R** comply with all the relevant provisions of the following Directives and Regulations:

Machinery (MD) Directive 2006/42/EC as amended up to and including Regulation (EU) 2019/1243	ISO 12100:2010 & EN 16990:2020
Non-Road Mobile Machinery (NRMM) Regulation (EU) 2016/1628 on gaseous pollutants as amended up to and including Regulation (EU) 2022/992	Category ATS, Stage V emission limits
Electromagnetic Compatibility (EMC) Directive 2014/30/EU as amended up to and including Regulation (EU) 2018/1139	CISPR 12:2007/A1:2009 & IEC 61000-6-1:2007 or UN R10.05 or later version
Battery Directive 2006/66/EC as amended up to and including Directive (EU) 2018/849 and, Regulation (EU) 1103/2010 on battery capacity labelling	EN 50342-7:2015
Radio Equipment (RED) Directive 2014/53/EU as amended up to and including Regulation (EU) 2023/1717 (If fitted with radio frequency (RF) D.E.S.S. key)	Art. 3.1a: IEC 62368-1:2014 Art. 3.1b: CISPR 25:2016 & ISO 11452-2:2004 Art. 3.2: ETSI EN 300 330 V2.1.1:2017

Luc Bouchard

Luc Bouchard (Mars, 2025 12:06 EST)

Luc Bouchard, Eng.
Director, Product Development, Can-Am SSV
Bombardier Recreational Products Inc.

Valcourt, QC, Canada

06/03/2025

skidoo LYNX SEA-DOO EVINRUDE ROTAX Can-Am

5

UK Declaration of Conformity

565 de la Montagne Street
Valcourt (Québec) J0E 2L0
Canada

ADVENTURE BY DESIGN

UK Declaration of Conformity

Authorized Representative: BRP Recreational Products UK Ltd., Mitchell Charlesworth Suites C, D, E & F, 14th Floor The Plaza, 100 Old Hall Street, Liverpool, L3 9QJ

This declaration of conformity is issued under the sole responsibility of the manufacturer.

The undersigned, representing the manufacturer, hereby declares that model year **2026 Side by Side Vehicles** marked with the UK CA mark and a 17-character vehicle identification number (VIN) structured as **3JBxxxxxxTxxxxxxx** under commercial names **Can-Am Traxter, Can-Am Maverick Sport, Can-Am Maverick,** and **Can-Am Maverick R** comply with all the relevant provisions of the following Statutory Instruments:

Supply of Machinery (Safety) Regulations 2008, UK SI 2008/1597 as amended up to and including SI 2024/696	ISO 12100:2010 & EN 16990:2020
Non-Road Mobile Machinery (Type-Approval and Emission of Gaseous and Particulate Pollutants) Regulations 2018, UK SI 2018/764 as amended up to and including SI 2022/1273	Category ATS, Stage V emission limits
Electromagnetic Compatibility Regulations 2016, UK SI 2016/1091 as amended up to and including SI 2024/696	CISPR 12:2007/A1:2009 & IEC 61000-6-1:2007 or UN R10.05 or later version
Batteries and Accumulators (Placing on the Market) Regulations 2008, UK SI 2008/2164 as amended up to and including UK SI 2020/1540	EN 50342-7:2015
Radio Equipment Regulations 2017, UK SI 2017/1206 as amended up to and including SI 2024/1231 (If fitted with radio frequency (RF) D.E.S.S. key)	Art. 3.1a: IEC 62368-1:2014 Art. 3.1b: CISPR 25:2016 & ISO 11452-2:2004 Art. 3.2: ETSI EN 300 330 V2.1.1:2017

Luc Bouchard
Luc Bouchard (Mar 6, 2025 12:06 EST)

Luc Bouchard, Eng.
Director, Product Development, Can-Am SSV
Bombardier Recreational Products Inc.

Valcourt, QC, Canada
06/03/2025

ski-doo LYNX SEA-DOO EVINRUDE ROTAX can-am

EAC DECLARATION OF CONFORMITY

Left blank for Eurasian Conformity mark (where applicable)

NOTES

6 TECHNICAL SPECIFICATIONS - TABLE OF CONTENTS

TECHNICAL SPECIFICATIONS 6-2

TECHNICAL SPECIFICATIONS

Engine	
Engine type	ROTAX® 999
	4-stroke, Double Over Head Camshaft (DOHC), dry sump, liquid cooled
Number of cylinders	3
Number of valves	12 valves (self adjusting hydraulic valve lifters)
Bore	75 mm (2.95 in)
Stroke	75.4 mm (2.97 in)
Displacement	999.32 cm^3 (60.98 in^3)
Maximum HP RPM	7750 RPM

Engine	
Exhaust system	Catalyst Spark arrestor approved by USDA Forest Service
Air filter	Donaldson high performance filter

Lubrication System			
Type			Dry sump
Oil filter	Oil filter		Replaceable cartridge oil filter
Engine oil	Capacity	With HVAC	3.4 l (3.6 qt (liq.,US))
		Without HVAC	3.2 l (3.4 qt (liq.,US))
	Recommended XPS oil		See *Engine Oil – Recommended Type* in the *Maintenance Procedures* section of this guide

Cooling System		
Coolant	Recommended XPS coolant	See *Engine Coolant – Recommended Type* in the *Maintenance Procedures* section of this guide

Cooling System			
	Capacity	With HVAC	6.7 l (1.8 gal (liq.,US))
		Without HVAC	6 l (1.6 gal (liq.,US))

Transmission	
Type	pDrive primary and Quick Response System X (QRS-X) CVT with high airflow and Electronic Drive Belt Protection
Engagement	1900 RPM

Electrical System			
Magneto generator output		Without HVAC	650 W @ 4000 RPM
		With HVAC	1700 W @ 4000 RPM
Spark plug	Quantity		3
	Make and type		NGK LMAR8AI-8
	Gap (not adjustable)		0.7 to 0.8 mm (.028 to .031 in)

Electrical System		
Battery	Type	Maintenance free SLA
	Voltage	12 volts
	Nominal rating	32 A•h
Headlight		LED
Taillight		LED
Signature lights (if equipped)		LED
Fuses		Refer to *Fuses* in *Maintenance*

Fuel System			
Fuel pump	Type		Electric (in fuel tank)
Fuel	Type		Premium unleaded gasoline Refer to *Fuel – Requirements* section
	Minimum Octane rating	North America	87 AKI (R+M)/2
		Outside North America	91 RON
	Recommended Octane rating	North America	91 AKI (R+M)/2

Fuel System			
		Outside North America	95 RON
Fuel tank capacity			± 45 l (11.9 gal (liq.,US))
Fuel remaining when low fuel light turns ON			± 8 l (2.1 gal (liq.,US))

Gearbox		
Type		Dual range (HI-LO) with PARK, neutral and reverse
Gearbox oil	Capacity	1.4 l (47 fl oz (US)) refill
	Recommended XPS oil	See *Gearbox Oil - Recommended Type* in the *Maintenance Procedures* section of this guide

Drive System	
Front drive	Selectable 2WD / 4WD with Quick–4Lok auto-locking front differential
Front drive ratio	3.6:1

Drive System		
Rear drive		Lockable differential
Front differential oil	Capacity	475 ml (16.72 fl oz (US))
	Recommended XPS oil	See *Front Differential Oil - Recommended Type* in the *Maintenance Procedures* section of this guide
CV joint grease		CV joint grease

Steering	
Type	Rack and pinion
Steering wheel	Adjustable tilt steering

Front Suspension		
Suspension type		Arched double suspension arms with stabilizer bar
Suspension travel	Defender XT, Defender XT CAB, Defender XU Traxter XT	30.5 cm (12 in)

Front Suspension		
Shock absorber	Quantity	2
	Type	Twin tube gas charged shocks
Preload adjustment type		Cam – 5 adjustments

Rear Suspension			
Suspension type			Arched double suspension arms with stabilizer bar
Suspension travel		Defender XT, Defender XT CAB, Defender XU Traxter XT	30.5 cm (12 in)
Shock absorber	Quantity		2
	Type		Twin tube gas charged shocks
Preload adjustment type			Cam – 5 adjustments

Brakes		
Front brake	Qty	2
	Type	262 mm

Brakes		
		(10.3 in) with hydraulic twin-pistons calipers of 32 mm (1.26 in)
Rear brake	Qty	2
	Type	236 mm (9.3 in) with hydraulic single-piston calipers of 32 mm (1.26 in)
Brake fluid	Type	DOT 4
	Capacity	315 ml (10.6 fl oz (US))
Caliper		Floating
Brake pad material		Sintered high performance
Minimum brake pad thickness		0.5 mm (.02 in)
Minimum brake disc thickness		4 mm (.157 in)
Maximum brake disc warpage		0.2 mm (.01 in)

Tires		
Pressure		Recommended tire inflation pressure is found on the Tire Label. Refer to appropriate *Important On-Product Labels* section for its locations.
Size	Front	736 x 229 x 356 (29x9R14)
	Rear	736 x 279 x 356 (29x11R14)
Minimum tire thread depth		3 mm (.118 in)

Wheels		
Type		Cast aluminum wheels
Rim size	Front	35.6 x 17.8 cm (14 x 7 in)
	Rear	35.6 x 21.6 cm (14 x 8.5 in)
Wheel lug nuts torque	Step 1	25 ± 10 Nm (18.4 ± 7.4 lbf-ft)

Wheels			
		Step 2	120 ± 10 Nm (88.5 ± 7.4 lbf-ft)
Wheel Offset	Front		+41.2 mm (2 in)
	Rear		+51 mm (1.62 in)

Chassis	
Cage type	Profiled cage ROPS approved ASTM HSLA Grade 50 steel

Dimensions		
Overall length	Defender XT, Defender XT CAB Traxter XT	330 cm (129.8 in)
	Defender XU	312 cm (122.7 in)
Overall width		165 cm (65 in)

Dimensions	
Overall height	206 cm (81 in)
Wheelbase	216 cm (85 in)

Dimensions			
Wheel track	Front	Defender XT, Defender XT CAB Traxter XT	145 cm (56.9 in)
		Defender XU	146 cm (57.3 in)
	Rear	Defender XT, Defender XT CAB Traxter XT	139 cm (54.9 in)
		Defender XU	139 cm (54.9 in)
Ground clearance			35.6 cm (14 in)

Loading Capacity and Weight		
Person capacity		3
Estimate dry weight	Defender XT Traxter XT	848 kg (1,870 lb)
	Defender XT CAB	982 kg (2,165 lb)
	Defender XU	857 kg (1,890 lb)
Cargo box capacity	California models	272.2 kg (600 lb)
	Other models	454 kg (1,000 lb)
Tailgate load capacity		113.4 kg (250 lb)
Total vehicle load allowed (including driver, passengers, all other loads and added accessories)		680 kg (1,500 lb)
Gross vehicle weight rating	Defender XT, Traxter XT	1564.9kg (3450 lb)
	Defender XU	1574 kg (3470 lb)

Loading Capacity and Weight		
	Defender XT CAB	1564.9kg (3450 lb)
Towing capacity		1 134 kg (2.500 lb)
Tongue capacity		114 kg (250 lb)
Receiver Hitch		50.8 x 50.8 mm (2 x 2 in)

7 TROUBLESHOOTING - TABLE OF CONTENTS

TROUBLESHOOTING GUIDELINES 7-2

CVT Belt Is Slipping 7-2

“–” Is Displayed On the Gearbox Position Display 7-2

Engine Does Not Turn 7-2

Engine Turns Over But Fails To Start 7-3

Engine Lacks Acceleration or Power 7-3

Engine Overheats 7-4

Engine Misfire 7-4

The RPM Increases But the Vehicle Does Not Move 7-5

Partial or No Response From the Accelerator Pedal - Check Engine Is ON and PPS Fault Message Is Displayed 7-5

DIGITAL DISPLAY MESSAGES 7-6

TROUBLESHOOTING GUIDELINES

CVT Belt Is Slipping

Water has entered in the CVT.

Refer to *Special Procedures*.

"–" Is Displayed On the Gearbox Position Display

Shift lever is between 2 positions.

Properly position the shift lever in the desired position.

Shift lever is not properly adjusted.

Contact an authorized Can-Am Off-road dealer.

Electrical communication error.

Contact an authorized Can-Am Off-road dealer.

Engine Does Not Turn

D.E.S.S. key is not installed on D.E.S.S. post.

Securely install key to D.E.S.S. post.

D.E.S.S. key not recognized is displayed in the multifunction gauge.

Clean D.E.S.S. key. If message still displayed after cleaning, see an authorized Can-Am Off-road dealer.

Shift lever is not set on PARK.

Set shift lever to either in PARK or press the brake pedal.

Burnt fuse.

Check fuses.

Weak battery or loose connections.

Check charging system fuse.

Check fault message in cluster.

Check battery connections and terminals condition.

Have the battery checked by an authorized Can-Am Off-road dealer.

Defective engine start button.

Contact an authorized Can-Am Off-road dealer.

Defective starter solenoid.

Contact an authorized Can-Am Off-road dealer.

Engine Turns Over But Fails To Start

Flooded engine

Active the drowned mode to start the engine. Refer to *Flooded Engine* in *Special Procedures* section.

No fuel to the engine (spark plug dry when removed).

Check fuel tank level.

Check fuel pump fuse.

Obstructed fuel pump pre-filter or fuel pump failure.

See an authorized Can-Am Off-road dealer, a repair shop, or a person of your own choosing for maintenance, repair, or replacement.

Please refer to the *US EPA Emission-Related Warranty* contained herein for information about warranty claims.

Spark plug/ignition (no spark).

Check ignition fuse.

Remove spark plug then reconnect to ignition coil.

Start engine with spark plug grounded to the engine away from spark plug hole. If no spark appears, replace spark plug.

If trouble persists, see an authorized Can-Am Off-road dealer, a repair shop, or a person of your own choosing for maintenance, repair, or replacement.

Please refer to the *US EPA Emission-Related Warranty* contained herein for information about warranty claims.

Engine Lacks Acceleration or Power

Seat belt not buckled properly. Check cluster message.

Buckle up seat belt.

Fouled or damaged spark plug.

Replace spark plugs.

Engine air filter plugged or dirty.

Check air filter and replace if necessary.

Check deposits in engine air filter housing.

Water in CVT

Drain water from CVT. Refer to *Special Procedures* section.

CVT dirty or worn-out.

Contact an authorized Can-Am Off-road dealer.

Lack of fuel

Dirty or clogged fuel pump pre-filter. See an authorized Can-Am Off-road dealer, a repair shop, or a person of your own choosing for maintenance, repair, or replacement. Please refer to the *US EPA Emission-Related Warranty* contained herein for information about warranty claims.

Engine is in Torque Limitation mode (if equipped).

Engine torque is gradually limited for protection when coolant temperature is too high. Check multifunction gauge display for engine temperature.

Let engine cool down.

Engine is in limp home mode.

Multifunction gauge CHECK ENGINE indicator lamp is on and display shows LIMP HOME. See an authorized Can-Am Off-road dealer, a repair shop, or a person of your own choosing for maintenance, repair, or replacement. Please refer to the *US EPA Emission-Related Warranty* contained herein for information about warranty claims.

Engine Overheats

Low coolant level in cooling system.

Check coolant level and refill. See *Maintenance Procedures*. Seek service from an authorized Can-Am Off-road dealer, a repair shop, or a person of your own choosing for maintenance, repair, or replacement. Please refer to the *US EPA Emission-related warranty* contained herein for information about warranty claims.

Cooling fan is not working.

Ensure cooling fan is not jammed and working properly.

Check fan fuse. See *Fuses and Fusible Links* in the *Maintenance Procedures*.

Dirty radiators fins.

Check and clean radiator fins. See *Maintenance Procedures*.

Engine Misfire

Fouled/damaged/worn spark plug.

Replace spark plugs as required.

Water in fuel.

Drain fuel system and refill with fresh fuel.

The RPM Increases But the Vehicle Does Not Move

Water in the CVT.

Drain water from CVT. See *Special Procedures* section.

CVT dirty or worn-out or belt failure.

Contact an authorized Can-Am Off-road dealer.

Partial or No Response From the Accelerator Pedal - Check Engine Is ON and PPS Fault Message Is Displayed

Partial failure of the accelerator pedal sensors (PPS).

Contact an authorized Can-Am Off-road dealer.

Total failure of the accelerator pedal sensors (PPS).

Contact an authorized Can-Am Off-road dealer.

DIGITAL DISPLAY MESSAGES

If an abnormal engine condition occurs, the following messages can be combined with a pilot lamp.

Message	Description
D.E.S.S. KEY NOT RECOGNIZED	D.E.S.S. key requires cleaning. If message still displayed after cleaning, See an authorized Can-Am Off-road dealer.
BAD KEY	Indicates that you have used the wrong D.E.S.S. key, use the proper key for this vehicle.
CHECK ENGINE	All active or previously activated faults that require attention. No engine limitation engaged.
LIMP HOME	Critical faults requiring diagnostic as soon as possible. An engine limitation is engaged and/or the engine behavior is modified.
TPS FAULT	Throttle body fault, generally followed by a Limp Home message.
BRAKE SWITCH FAULT	Brake signal fault.
CHECK DPS	Check engine pilot light on. Indicates that the DPS (Dynamic Power Steering) does not work properly. See an authorized Can-Am Off-road dealer.
PPS FAULT	Faulty Pedal Position Sensor(s) (PPS). See an authorized Can-Am Off-road dealer.

FUEL SENSOR FAULT	When the fuel sender resistor value is out of range the digital display module will detect it and display the message.
CHECK SMART-LOK	Check engine pilot light on. Indicates that the Smart-Lok does not work properly. See an authorized Can-Am Off-road dealer.

NOTES

8 WARRANTY - TABLE OF CONTENTS

BRP LIMITED WARRANTY FOR CANADA AND USA: 2026 CAN-AM® SSV 8-2

US EPA EMISSION - RELATED WARRANTY 8-9

CALIFORNIA EVAPORATIVE EMISSIONS CONTROL WARRANTY STATEMENT. 8-14

BRP LIMITED WARRANTY FOR INTERNATIONAL: 2026 CAN-AM® SSV 8-20

BRP LIMITED WARRANTY FOR THE EUROPEAN ECONOMIC AREA, THE COMMONWEALTH OF THE INDEPENDENT STATES AND TURKEY: 2026 CAN-AM® SSV. 8-28

BRP LIMITED WARRANTY FOR CANADA AND USA: 2026 CAN-AM® SSV

1) Scope of the Limited Warranty

Bombardier Recreational Products Inc. ("**BRP**") warrants its 2026 Can-Am SSV (the "**Product**") sold by authorized BRP dealers in the United States of America ("**USA**") and in Canada from defects in material or workmanship for the period and under the conditions described below.

This limited warranty will become null and void if:

1. the Product was used for racing or any other competitive activity, at any point, even by a previous owner; or
2. the Product has been altered or modified in such a way so as to adversely affect its operation, performance or durability, or has been altered or modified to change its intended use.

Non-factory installed parts and accessories are not covered under this limited warranty. Please refer to the applicable parts and accessories limited warranty text.

2) Limitations of Liability

TO THE EXTEND PERMITTED BY LAW, THIS WARRANTY IS EXPRESSLY GIVEN AND ACCEPTED IN LIEU OF ANY AND ALL OTHER WARRANTIES, EXPRESSED OR IMPLIED, INCLUDING WITHOUT LIMITATION ANY WARRANTY OF MERCHANTABILITY OR FITNESS FOR A PARTICULAR PURPOSE. TO THE EXTENT THAT THEY CANNOT BE DISCLAIMED, THE IMPLIED WARRANTIES ARE LIMITED IN DURATION TO THE LIFE OF THE EXPRESS WARRANTY. INCIDENTAL AND CONSEQUENTIAL DAMAGES ARE EXCLUDED FROM COVERAGE UNDER THIS WARRANTY. SOME STATES/PROVINCES DO NOT ALLOW FOR THE DISCLAIMERS, LIMITATIONS AND EXCLUSIONS IDENTIFIED ABOVE. AS A RESULT, THEY MAY NOT APPLY TO YOU. THIS WARRANTY GIVES YOU SPECIFIC RIGHTS, AND YOU MAY ALSO HAVE OTHER LEGAL RIGHTS WHICH MAY VARY FROM STATE TO STATE, OR PROVINCE TO PROVINCE.

Neither the distributor, any BRP Dealer nor any other person has been authorized to make any affirmation, representation or warranty regarding the Product, other than those contained in this limited warranty, and if made, shall not be enforceable against BRP.

BRP reserves the right to modify this limited warranty at any time, being understood that such modification will not alter the warranty conditions applicable to the Products sold while this warranty is in effect

3) EXCLUSIONS – Are Not Warranted

The following are not warranted under any circumstances:

- Normal wear and tear;
- Routine maintenance items, tune ups, adjustments;
- Damage caused by negligence or failure to provide proper maintenance and/or storage, as described in the Operator's Guide;
- Damage resulting from removal of parts, improper repairs, service, maintenance, modifications or use of parts not manufactured or approved by BRP or resulting from repairs done by a person that is not an authorized servicing BRP Dealer;
- Damage caused by abuse, abnormal use, neglect or operation of the Product in a manner inconsistent with the recommended operation described in the Product’s Operator’s Guide;
- Damage resulting from accident, submersion, fire, theft, vandalism or any act of God;
- Operation with fuels, oils or lubricants which are not suitable for use with the Product (see the Operator’s Guide);
- Damages from rust, corrosion or exposure to the elements;
- Damage resulting from water or snow ingestion;
- Incidental or consequential damages, or damages of any kind including without limitation transportation expenses, towing, storage, telephone, rental, taxi, inconvenience, insurance coverage, loan payments, loss of time, loss of income or time missed for downtime experience due to service work.

The following list includes, without limitation, items that are considered wear items and that are not covered under BRP's limited warranty unless failure is a direct result of a defect in material or workmanship:

- Batteries
- Brake pads
- Brake disks and drums
- Clutch plates / pads
- Clutch sliders
- Clutch springs
- Clutch replaceable bushings
- Drive belts
- Filters
- Finished and unfinished surfaces
- Fuses
- Light bulbs / sealed beam
- Lubricants
- Spark plugs
- Suspension bushings
- Suspension slider shoes
- Suspension springs

- Tires.

4) Warranty Coverage Period

This limited warranty will be in effect from (1) the date of delivery to the first retail consumer, or (2) the date the Product is first put into use, whichever occurs first and for the applicable period below:

1. **TWELVE (12) consecutive months**, for private use or commercial use owners.
2. **For emission-related components**, please also refer to the US EPA Emission-Related Warranty.
3. **For evaporative emission-related components of California models equipped with evaporative emission control system produced by BRP for sale in the State of California** that are originally sold to a resident or subsequently warranty registered to a resident in the State of California, also refer to the California Evaporative Emissions Control Warranty Statement.

The repair or replacement of parts or the performance of service under this warranty does not extend the life of this limited warranty beyond its original expiration date.

5) Conditions to Have Warranty Coverage

This warranty coverage is available only if each of the following conditions has been fulfilled:

1. The Product must be purchased as new and unused by its first owner from a Dealer authorized to sell the Products in the country in which the sale occurred (“Dealer”);
2. The BRP specified pre-delivery inspection process must be completed, documented and signed by the purchaser;
3. The Product must have undergone proper registration by an authorized Dealer;
4. The Product must be purchased in the country in which the purchaser resides;
5. Routine maintenance outlined in the Operator’s Guide must be timely performed in order to maintain warranty coverage. BRP reserves the right to make warranty coverage contingent upon proof of proper maintenance.

BRP will not honor this limited warranty to any private use owner or commercial use owner if one of the preceding conditions has not been met. Such limitations are necessary in order to allow BRP to preserve both the safety of its products, and also that of its consumers and the general public.

6) What to Do to Obtain Warranty Coverage

The customer must cease using the Product upon the appearance of an anomaly, notify a servicing BRP Dealer within three (3) days of the appearance of the anomaly and provide the Dealer with reasonable access to the Product and reasonable opportunity to repair it.

The customer must also present to the Dealer, proof of purchase of the Product and must sign the repair/work order prior to starting the repair in order to validate the warranty repair.

All parts replaced under this limited warranty become the property of BRP.

7) What BRP Will Do

BRP's obligations under this warranty are limited to, at its sole discretion, repairing or replacing parts found defective under normal use, maintenance and service without charge for parts and labor, at any authorized BRP Dealer during the warranty coverage period under the conditions described herein. No claim of breach of warranty shall be cause for cancellation or rescission of the sale of the Product to the owner.

In the event that service is required outside of the country of original sale, the owner will bear responsibility for any additional charges due to local practices and conditions, such as, but not limited to, freight, insurance, taxes, license fees, import duties, and any and all other financial charges, including those levied by governments, states, territories and their respective agencies.

BRP reserves the right to improve or modify products from time to time without assuming any obligation to modify products previously manufactured.

8) Transfer

If the ownership of a Product is transferred during the warranty coverage period, this limited warranty, subject to its terms and conditions, shall also be transferred and be valid for the remaining coverage period provided BRP or an authorized Product Distributor/Dealer receives a proof that the former owner agreed to the transfer of ownership, in addition to the coordinates of the new owner.

9) Consumer Assistance

In the event of a controversy or a dispute in connection with this limited warranty, BRP suggests that you try to resolve the issue at the dealership level. We recommend discussing the issue with the authorized BRP dealer's service manager or owner.

If the matter still remains unresolved, contact BRP by filling out the customer contact form at **www.brp.com** or contact BRP by mail at one of the addresses listed under the *Contact Us* section of this guide.

US EPA EMISSION - RELATED WARRANTY

Bombardier Recreational Products Inc. (“BRP”) warrants to the ultimate purchaser and each subsequent purchaser that this new vehicle, including all parts of its exhaust emission control system and its evaporative emission control system, meets two conditions:

1. It is designed, built, and equipped so it conforms at the time of sale to the ultimate purchaser with the requirements of 40 CFR 1051 and 40 CFR 1060.
2. It is free from defects in materials and workmanship that may keep it from meeting the requirements of 40 CFR 1051 and 40 CFR 1060.

Where a warrantable condition exists, BRP will repair or replace, as it elects, any part or component with a defect in materials or workmanship that would increase the engine’s emissions of any regulated pollutant within the stated warranty period at no cost to the owner, including expenses related to diagnosing and repairing or replacing emission-related parts. All defective parts replaced under this warranty become the property of BRP.

For all emission-related warranty claims, BRP is limiting the diagnosis and repair of emission-related parts to the authorized Can-Am dealers, unless for emergency repairs as required by item 2 of the following list.

As a certifying manufacturer, BRP will not deny emission-related warranty claims based on any of the following:

1. Maintenance or other service BRP or BRP's authorized facilities performed.
2. Engine/equipment repair work that an operator performed to correct an unsafe, emergency condition attributable to BRP as long as the operator tries to restore the engine/equipment to its proper configuration as soon as possible.
3. Any action or inaction by the operator unrelated to the warranty claim.
4. Maintenance that was performed more frequently than BRP specify.
5. Anything that is BRP fault or responsibility.

6. The use of any fuel that is commonly available where the equipment operates unless BRP written maintenance instructions state that this fuel would harm the equipment's emission control system and operators can readily find the proper fuel. See maintenance information section and fuel requirements of fueling section.

Emission-Related Warranty Period

The emission-related warranty is valid for the following period whichever comes first.

	HOURS	MONTHS	KILOMETERS
Exhaust and evaporative emission-related components	500	30	5000

Components Covered

The emission-related warranty covers all components whose failure would increase an engine's emissions of any regulated pollutant, including the following listed components:

1. For exhaust emissions, emission-related components include any engine parts related to the following systems:
   - Air-induction system
   - Fuel system
   - Ignition system
   - Exhaust gas recirculation systems.
2. The following parts are also considered emission-related components for exhaust emissions:
   - After treatment devices
   - Crankcase ventilation valves
   - Sensors
   - Electronic control units.
3. The following parts are considered emission-related components for evaporative emissions:
   - Fuel tank
   - Fuel cap
   - Fuel line
   - Fuel line fittings
   - Clamps*

- Pressure relief valves*
- Control valves*
- Control solenoids*
- Electronic controls*
- Vacuum control diaphragms*
- Control cables*
- Control linkages*
- Purge valves
- Vapor hoses
- Liquid/vapor separator
- Carbon canister
- Canister mounting brackets
- Carburetor purge port connector.

Note
*As related to the evaporative emission control system.

4. Emission-related components also include any other part whose only purpose is to reduce emissions or whose failure will increase emissions without significantly degrading engine/equipment performance.

Limited Applicability

As a certifying manufacturer, BRP may deny emission-related warranty claims for failures that have been caused by the owner's or operator's improper maintenance or use, by accidents for which the manufacturer has no responsibility, or by acts of God. For example, an emission-related warranty claim need not be honored for failures that have been directly caused by the operator's abuse of the engine/equipment or the operator's use of the engine/equipment in a manner for which it was not designed and are not attributable to the manufacturer in anyway.

If you have any question regarding your warranty rights and responsibility or for the name and location of the nearest authorized BRP dealer, you should contact BRP by filling out the customer contact form at **www.brp.com** or contact BRP by mail at one of the addresses listed under the CONTACT US section of this guide, or call at 1-888-272-9222.

CALIFORNIA EVAPORATIVE EMISSIONS CONTROL WARRANTY STATEMENT

The warranty periods begin on the date the new Off-Highway Recreational Vehicle (“OHRV”) is delivered to an ultimate purchaser.

Bombardier Recreational Products Inc. (“BRP”) warrants to the ultimate purchaser and each subsequent purchaser that the OHRV is:

1. Designed, built, and equipped so as to conform, at the time of sale, with all applicable laws, rules and regulations; and
2. Free from defects in materials and workmanship that may cause the failure of a warranted part. All replacement parts must be identical in all material respects to that part as described in BRP’s Executive Order of Certification application.

The warranty on emissions-related parts function as follows:

1. Repair or replacement of any warranted part must be performed at no charge to the OHRV owner, at a warranty station, except in the case of a temporary repair when a warranted part or a warranty station is not reasonably available to the OHRV owner. In the event a temporary repair is permitted, repairs may be performed at any available service establishment, or by the owner, using any replacement part. BRP must reimburse the owner for his or her expenses including diagnostic charges for such temporary repair or replacement, not to exceed BRP's suggested retail price for all warranted parts replaced and labor charges based on BRP's recommended time allowance for the warranty repair and the geographically appropriate hourly labor rate.
2. The lack of availability of warranted parts or the incompleteness of repairs within a reasonable time period, not to exceed 30 days from the time the OHRV is initially presented to the warranty station for repair, will qualify the need for a temporary repair.
3. Any warranted part which is not scheduled for replacement as part of maintenance in the written instructions must be warranted for the warranty period defined below. If any such part fails during the warranty period, it must be repaired or replaced by BRP. Any such part repaired or replaced under warranty must be fully warranted.
4. Any warranted part which is scheduled only for regular inspection in the written instructions must be warranted for the warranty period defined below. A statement in such written instructions to the effect of “repair or replace as necessary” does not reduce the period of warranty coverage. Any such part repaired or replaced under warranty is warranted for the remaining warranty period.
5. Any warranted part which is scheduled for replacement as part of maintenance in the written instructions is warranted for the period of time prior to the first scheduled replacement point for that part. If the part fails before the first scheduled replacement point, the part will be repaired or replaced by BRP. Any such part repaired or replaced under warranty is warranted for the remainder of the period prior to the first scheduled replacement point for the part.
6. Warranty services or repairs are provided at all manufacturer dealerships that are owned by the manufacturer or franchised to service the subject OHRVs.
7. The OHRV owner will not be charged for diagnostic labor which leads to the determination that a warranted part is, in fact, defective, provided that such diagnostic work is performed at a warranty station.
8. BRP is liable for damages to other vehicle components proximately caused by a failure, under warranty, of any warranted part.

9. Any replacement part designated by BRP may be used in warranty repairs provided without charge to the OHRV owner. Such use will not reduce the warranty obligations of BRP, except that BRP will not be liable for repair or replacement of any replacement part which is not a warranted part.
10. Any add-on or modified part exempted by the Air Resources Board from the prohibitions of section 27156 of the California Vehicle Code may be used on an OHRV. Such use, in and of itself, will not be grounds for disallowing a warranty claim. BRP is not liable to warrant failures of warranted parts caused by the use of an add-on or modified part(s) unless such part(s) are also warranted.

Conditions and exclusions:

- BRP may deny you warranty coverage if your OHRV or a part has failed directly due to abuse, neglect, improper maintenance or unapproved modifications.

Your Warranty Rights And Obligations

The California Air Resources Board is pleased to explain the evaporative emissions control system warranty on your 2026 Off-Road Sport Vehicle. In California, new off-highway recreational vehicles must be designed, built, and equipped to meet the State's stringent anti-smog standards. BRP must warrant the evaporative emissions control system on your Off-Road Sport Vehicle for the periods of time listed below provided there has been no abuse, neglect, improper maintenance, or unapproved modification of your Off-Road Sport Vehicle.

Your evaporative emissions control system may include parts such as the carburetor or fuel-injection system, fuel tank, fuel hoses, carbon canister, and engine computer. Also included may be hoses, belts, connectors and other evaporative emissions-related assemblies. Where a warrantable condition exists, Bombardier Recreational Products Inc. will repair your Off-Road Sport Vehicle at no cost to you including diagnosis, parts and labor.

OHRV Manufacturer's Warranty Coverage

The warranty period for this OHRV is 60 months, or 5000 miles, or 500 hours, whichever comes first.

Parts covered:

1. Canister Mounting Bracket(s)
2. Carbon Canister
3. Purge Port Connector
4. Clamp(s)*
5. Electronic Control*
6. Fuel Cap
7. Filler Neck
8. Filler Neck Hose
9. Fuel Line(s)
10. Fuel Line Fitting(s)
11. Fuel Tank
12. Pressure Relief Valve(s)*
13. Purge Valve(s)
14. Check Valve(s)*
15. Vapor Hose(s)
16. Flow Reducer
17. Filter(s)*
18. Fuel pump

19. All other parts not listed that may affect the evaporative emissions control system

NOTE
*As related to the evaporative emission control system.

If any evaporative emissions-related part on your Off-Road Sport Vehicle is defective the part will be repaired or replaced by Bombardier Recreational Products Inc.

Owner's Warranty Responsibilities

As the Off-Road Sport Vehicle owner you are responsible for the performance of the required maintenance listed in your owner's manual. Bombardier Recreational Products Inc. recommends that you retain all receipts covering maintenance on your Off-Road Sport Vehicle, but Bombardier Recreational Products Inc. cannot deny warranty solely for the lack of receipts or for failure to ensure the performance of a scheduled maintenance.

As an owner you are responsible for presenting your Off-Road Sport Vehicle to a Bombardier Recreational Products Inc. dealer as soon as a problem exists. The warranty repairs should be completed in a reasonable time, not to exceed 30 days.

As an Off-Road Sport Vehicle owner, you should also be aware that Bombardier Recreational Products Inc. may deny you warranty coverage if your Off-Road Sport Vehicle or a part has failed due to abuse, neglect, improper maintenance or unapproved modifications.

If you have any questions regarding your warranty rights and responsibilities, you should contact:

- Bombardier Recreational Products Inc. at 1-888-272-9222, or
- The California Air Resources Board at 4001 Iowa Avenue, Riverside, CA 92507.

BRP LIMITED WARRANTY FOR INTERNATIONAL: 2026 CAN-AM® SSV

1) Scope of the Limited Warranty

Bombardier Recreational Products Inc. ("**BRP**") warrants its 2026 Can-Am SSV (the "**Product**") sold by distributors or dealers authorized by BRP to distribute the Products outside of the United States of America ("**USA**"), Canada, member states of the European Economic Area (which is comprised of the states of the European Union plus the United Kingdom, Norway, Iceland and Liechtenstein) ("**EEA**"), member states of the Commonwealth of the Independent States (including Ukraine and Turkmenistan) ("**CIS**") and Turkey from defects in material or workmanship for the period and under the conditions described below.

This limited warranty will become null and void if:

1. the Product was used for racing or any other competitive activity, at any point, even by a previous owner; or
2. the Product has been altered or modified in such a way so as to adversely affect its operation, performance or durability, or has been altered or modified to change its intended use.

Non-factory installed parts and accessories are not covered under this limited warranty. Please refer to the applicable parts and accessories limited warranty text.

2) Limitation of Liability

TO THE EXTEND PERMITTED BY LAW, THIS WARRANTY IS EXPRESSLY GIVEN AND ACCEPTED IN LIEU OF ANY AND ALL OTHER WARRANTIES, EXPRESSED OR IMPLIED, INCLUDING WITHOUT LIMITATION ANY WARRANTY OF MERCHANTABILITY OR FITNESS FOR A PARTICULAR PURPOSE. TO THE EXTENT THAT THEY CANNOT BE DISCLAIMED, THE IMPLIED WARRANTIES ARE LIMITED IN DURATION TO THE LIFE OF THE EXPRESS WARRANTY. INCIDENTAL AND CONSEQUENTIAL DAMAGES ARE EXCLUDED FROM COVERAGE UNDER THIS WARRANTY. SOME JURISDICTIONS DO NOT ALLOW FOR THE DISCLAIMERS, LIMITATIONS AND EXCLUSIONS IDENTIFIED ABOVE. AS A RESULT, THEY MAY NOT APPLY TO YOU. THIS WARRANTY GIVES YOU SPECIFIC RIGHTS, AND YOU MAY ALSO HAVE OTHER LEGAL RIGHTS WHICH MAY VARY FROM COUNTRY TO COUNTRY. BRP SHALL NOT BE HELD LIABLE IF PRODUCTS OR WARRANTY PARTS ARE NOT AVAILABLE IN CERTAIN COUNTRIES FOR REASONS OUTSIDE OF BRP'S CONTROL.

For Products purchased in Australia, refer to the Australia specific section below.

Neither the distributor, any BRP Distributor/Dealer nor any other person has been authorized to make any affirmation, representation or warranty regarding the Product, other than those contained in this limited warranty, and if made, shall not be enforceable against BRP.

BRP reserves the right to modify this limited warranty at any time, being understood that such modification will not alter the warranty conditions applicable to the Products sold while this warranty is in effect.

3) EXCLUSIONS – Are Not Warranted

The following are not warranted under any circumstances:

- Normal wear and tear;
- Routine maintenance items, tune ups, adjustments;
- Damage caused by negligence or failure to provide proper maintenance and/or storage, as described in the Operator's Guide;
- Damage resulting from removal of parts, improper repairs, service, maintenance, modifications or use of parts not manufactured or approved by BRP or resulting from repairs done by a person that is not an authorized servicing BRP Distributor/Dealer;
- Damage caused by abuse, abnormal use, neglect or operation of the Product in a manner inconsistent with the recommended operation described in the Product’s Operator’s Guide;
- Damage resulting from accident, submersion, fire, theft, vandalism or any act of God;
- Operation with fuels, oils or lubricants which are not suitable for use with the Product (see the Operator’s Guide);
- Damages from rust, corrosion or exposure to the elements;
- Damage resulting from water or snow ingestion;
- Incidental or consequential damages, or damages of any kind including without limitation transportation expenses, towing, storage, telephone, rental, taxi, inconvenience, insurance coverage, loan payments, loss of time, loss of income or time missed for downtime experience due to service work.

The following list includes, without limitation, items that are considered wear items and that are not covered under BRP's limited warranty unless failure is a direct result of a defect in material or workmanship:

- Batteries
- Brake pads
- Brake disks and drums
- Clutch plates / pads
- Clutch sliders
- Clutch springs
- Clutch replaceable bushings
- Drive belts
- Filters
- Finished and unfinished surfaces
- Fuses
- Light bulbs / sealed beam
- Lubricants
- Spark plugs
- Suspension bushings
- Suspension slider shoes
- Suspension springs

- Tires.

4) Warranty Coverage Period

This limited warranty will be in effect from (1) the date of delivery to the first retail consumer, or (2) the date the Product is first put into use, whichever occurs first and for the applicable period below:

1. **TWELVE (12) consecutive months**, for private use or commercial use owners.

In AUSTRALIA and NEW ZEALAND only, this warranty will be in effect from (1) the date of delivery to the first retail consumer or (2) the date the Product is first put into use, whichever occurs first, and for a period of **TWELVE (12) CONSECUTIVE MONTHS** and **THIRTY-SIX (36) CONSECUTIVE MONTHS** for Powertrain Engine and Transmission systems only, for private use or commercial use.

The repair or replacement of parts or the performance of service under this warranty does not extend the life of this warranty beyond its original expiration date.

The warranty coverage period identified above are a minimal limited warranty period which can be extended by any applicable warranty promotional program, as the case may be.

Note that the duration and any other modalities of the warranty coverage are subject to the applicable national or local legislation in the customer's country.

5) For Products Sold In Australia Only

Our goods come with guarantees that cannot be excluded under the Australian Consumer Law.

You are entitled to a replacement or refund for a major failure and for compensation for any other reasonably foreseeable loss or damage.

You are also entitled to have the goods repaired or replaced if the goods fail to be of acceptable quality and the failure does not amount to a major failure.

Nothing in these Warranty terms and conditions should be taken to exclude, restrict or modify the application of any condition, warranty, guarantee, right or remedy conferred or implied under the Competition and Consumer Act 2010 (Cth), including the Australian Consumer Law or any other law, where to do so would contravene that law, or cause any part of these terms and conditions to be void. The benefits given to you under this limited warranty are in addition to other rights and remedies that you have under Australian law.

6) Conditions to Have Warranty Coverage

This warranty coverage is available only if each of the following conditions has been fulfilled:

1. The Product must be purchased as new and unused by its first owner from a Distributor/Dealer authorized to distribute the Product in the country in which the sale occurred ("Distributor/Dealer");
2. The BRP specified pre-delivery inspection process must be completed, documented and signed by the purchaser;
3. The Product must have undergone proper registration by an authorized Distributor/ Dealer;
4. The Product must be purchased in the country in which the purchaser resides;
5. Routine maintenance outlined in the Operator’s Guide must be timely performed in order to maintain warranty coverage. BRP reserves the right to make warranty coverage contingent upon proof of proper maintenance.

BRP will not honor this limited warranty to any private use owner or commercial use owner if one of the preceding conditions has not been met. Such limitations are necessary in order to allow BRP to preserve both the safety of its products, and also that of its consumers and the general public.

7) What to Do to Obtain Warranty Coverage

The customer must cease using the Product upon the appearance of an anomaly, notify a servicing BRP Distributor/Dealer within two (2) months of the appearance of the anomaly and provide the Distributor/Dealer with reasonable access to the Product and reasonable opportunity to repair it.

The notification period is subject to the applicable national or local legislation in customer's country.

The customer must also present to the Distributor/Dealer, proof of purchase of the Product and must sign the repair/work order prior to starting the repair in order to validate the warranty repair.

All parts replaced under this limited warranty become the property of BRP.

8) What BRP Will Do

To the extent permitted by law, BRP’s obligations under this warranty are limited to, at its sole discretion, repairing or replacing parts found defective under normal use, maintenance and service without charge for parts and labor, at any authorized BRP Distributor/Dealer during the warranty coverage period under the conditions described herein. No claim of breach of warranty shall be cause for cancellation or rescission of the sale of the Product to the owner. You may have other legal rights which may vary from country to country.

In the event that service is required outside of the country of original sale, the owner will bear responsibility for any additional charges due to local practices and conditions, such as, but not limited to, freight, insurance, taxes, license fees, import duties, and any and all other financial charges, including those levied by governments, states, territories and their respective agencies.

BRP reserves the right to improve or modify products from time to time without assuming any obligation to modify products previously manufactured.

9) Transfer

If the ownership of a Product is transferred during the warranty coverage period, this limited warranty, subject to its terms and conditions, shall also be transferred and be valid for the remaining coverage period provided BRP or an authorized Product Distributor/Dealer receives a proof that the former owner agreed to the transfer of ownership, in addition to the coordinates of the new owner.

10) Consumer Assistance

In the event of a controversy or a dispute in connection with this limited warranty, BRP suggests that you try to resolve the issue at the dealership level. We recommend discussing the issue with the authorized Distributor/Dealer's service manager or owner.

If the matter still remains unresolved, contact BRP by filling out the customer contact form at **www.brp.com** or contact BRP by mail at one of the addresses listed under the *Contact Us* section of this guide.

BRP LIMITED WARRANTY FOR THE EUROPEAN ECONOMIC AREA, THE COMMONWEALTH OF THE INDEPENDENT STATES AND TURKEY: 2026 CAN-AM® SSV

1) Scope of the Limited Warranty

Bombardier Recreational Products Inc. ("**BRP**") warrants its 2026 Can-Am SSV (the "**Product**") sold by distributors or dealers authorized by BRP to distribute the Product in member states of the European Economic Area (which is comprised of the states of the European Union plus the United Kingdom, Norway, Iceland and Liechtenstein) ("**EEA**"), member states of the Commonwealth of the Independent States (including Ukraine and Turkmenistan) ("**CIS**") and Turkey ("**Distributor/Dealer**") from defects in material or workmanship for the period and under the conditions described below.

This limited warranty will become null and void if:

1. the Product was used for racing or any other competitive activity, at any point, even by a previous owner; or
2. the Product has been altered or modified in such a way so as to adversely affect its operation, performance or durability, or has been altered or modified to change its intended use.

Non-factory installed parts and accessories are not covered under this limited warranty. Please refer to the applicable parts and accessories limited warranty text.

2) Limitations of Liability

TO THE EXTEND PERMITTED BY LAW, THIS WARRANTY IS EXPRESSLY GIVEN AND ACCEPTED IN LIEU OF ANY AND ALL OTHER WARRANTIES, EXPRESSED OR IMPLIED, INCLUDING WITHOUT LIMITATION ANY WARRANTY OF MERCHANTABILITY OR FITNESS FOR A PARTICULAR PURPOSE. TO THE EXTENT THAT THEY CANNOT BE DISCLAIMED, THE IMPLIED WARRANTIES ARE LIMITED IN DURATION TO THE LIFE OF THE EXPRESS WARRANTY. INCIDENTAL AND CONSEQUENTIAL DAMAGES ARE EXCLUDED FROM COVERAGE UNDER THIS WARRANTY. SOME JURISDICTIONS DO NOT ALLOW FOR THE DISCLAIMERS, LIMITATIONS AND EXCLUSIONS IDENTIFIED ABOVE. AS A RESULT, THEY MAY NOT APPLY TO YOU. THIS WARRANTY GIVES YOU SPECIFIC RIGHTS, AND YOU MAY ALSO HAVE OTHER LEGAL RIGHTS WHICH MAY VARY COUNTRY TO COUNTRY. BRP SHALL NOT BE HELD LIABLE IF PRODUCTS OR WARRANTY PARTS ARE NOT AVAILABLE IN CERTAIN COUNTRIES FOR REASONS OUTSIDE OF BRP’S CONTROL.

For Products purchased in France, refer to the France specific section below.

Neither the distributor, any BRP Distributor/Dealer nor any other person has been authorized to make any affirmation, representation or warranty regarding the Product, other than those contained in this limited warranty, and if made, shall not be enforceable against BRP.

BRP reserves the right to modify this limited warranty at any time, being understood that such modification will not alter the warranty conditions applicable to the Products sold while this warranty is in effect.

3) EXCLUSIONS – Are Not Warranted

The following are not warranted under any circumstances:

- Normal wear and tear;
- Routine maintenance items, tune ups, adjustments;
- Damage caused by negligence or failure to provide proper maintenance and/or storage, as described in the Operator's Guide;
- Damage resulting from removal of parts, improper repairs, service, maintenance, modifications or use of parts not manufactured or approved by BRP or resulting from repairs done by a person that is not an authorized servicing BRP Distributor/Dealer;
- Damage caused by abuse, abnormal use, neglect or operation of the Product in a manner inconsistent with the recommended operation described in the Product’s Operator’s Guide;
- Damage resulting from accident, submersion, fire, theft, vandalism or any act of God;
- Operation with fuels, oils or lubricants which are not suitable for use with the Product (see the Operator’s Guide);
- Damages from rust, corrosion or exposure to the elements;
- Damage resulting from water or snow ingestion;
- Incidental or consequential damages, or damages of any kind including without limitation transportation expenses, towing, storage, telephone, rental, taxi, inconvenience, insurance coverage, loan payments, loss of time, loss of income or time missed for downtime experience due to service work.

The following list includes, without limitation, items that are considered wear items and that are not covered under BRP's limited warranty unless failure is a direct result of a defect in material or workmanship:

- Batteries
- Brake pads
- Brake disks and drums
- Clutch plates / pads
- Clutch sliders
- Clutch springs
- Clutch replaceable bushings
- Drive belts
- Filters
- Finished and unfinished surfaces
- Fuses
- Light bulbs / sealed beam
- Lubricants
- Spark plugs
- Suspension bushings
- Suspension slider shoes
- Suspension springs

- Tires.

4) Warranty Coverage Period

This limited warranty will be in effect from (1) the date of delivery to the first retail consumer, or (2) the date the Product is first put into use, whichever occurs first and for the applicable period below:

1. **TWENTY-FOUR (24) consecutive months**, for private use owners.
2. **SIX (6) consecutive months**, for commercial use owners.

A Product is used commercially when it is used in connection with any work or employment that generates income during any part of the warranty period. A Product is also used commercially when, at any point during the warranty period, it is licensed for commercial use.

The repair or replacement of parts or the performance of service under this warranty does not extend the life of this warranty beyond its original expiration date.

The warranty coverage period identified above are a minimal limited warranty period which can be extended by any applicable warranty promotional program, as the case may be.

Note that the duration and any other modalities of the warranty coverage are subject to the applicable national or local legislation in the customer's country.

5) For Products Sold In France Only

The seller shall deliver goods that are complying with the contract and shall be responsible for defects existing upon delivery. The seller shall also be responsible for defects resulting from packaging, assembling instructions or the installation when it is its responsibility per the contract or if accomplished under its responsibility. To be compliant with the contract, the good shall:

1. Be fit for normal use for goods similar thereto and, if applicable:
   - Correspond to the description provided by the seller and have the qualities presented to the buyer though sample or model;
   - Have the qualities that a buyer may legitimately expect considering the public declarations of the seller, the manufacturer of its representative, including in advertising or labeling; or
2. Have the characteristics mutually agreed upon as between the parties or be fit for the specific use intended by the buyer and brought to the attention of the seller and which were accepted by the seller.

The action for failure to comply is prescribed after two years after delivery of the goods. The seller is responsible for the warranty for hidden defects of the good sold if such hidden defects are rendering the good unfit for the intended use, or if they diminish its use in such a way that the buyer would not have acquired the good or would have given a lesser price, had he known. The action for such hidden defects shall be taken by the buyer within 2 years of the discovery of the defect.

6) Conditions to Have Warranty Coverage

This warranty coverage is available only if each of the following conditions has been fulfilled:

1. The Product must be purchased as new and unused by its first owner from a Distributor/Dealer authorized to distribute the Product in the country, or in the case of the EEA union of countries, in which the sale occurred ("Distributor/Dealer");
2. The BRP specified pre-delivery inspection process must be completed, documented and signed by the purchaser;
3. The Product must have undergone proper registration by an authorized Distributor/ Dealer;
4. The Product must be purchased in the country, or in the case of the EEA union of countries, in which the purchaser resides;
5. Routine maintenance outlined in the Operator’s Guide must be timely performed in order to maintain warranty coverage. BRP reserves the right to make warranty coverage contingent upon proof of proper maintenance.

BRP will not honor this limited warranty to any private use owner or commercial use owner if one of the preceding conditions has not been met. Such limitations are necessary in order to allow BRP to preserve both the safety of its products, and also that of its consumers and the general public.

7) What to Do to Obtain Warranty Coverage

The customer must cease using the Product upon the appearance of an anomaly, notify a servicing BRP Distributor/Dealer within two (2) months of the appearance of the anomaly and provide the Distributor/Dealer with reasonable access to the Product and reasonable opportunity to repair it.

The notification period is subject to the applicable national or local legislation in customer's country.

The customer must also present to the Distributor/Dealer, proof of purchase of the Product and must sign the repair/work order prior to starting the repair in order to validate the warranty repair.

All parts replaced under this limited warranty become the property of BRP.

8) What BRP Will Do

To the extent permitted by law, BRP's obligations under this warranty are limited to, at its sole discretion, repairing or replacing parts found defective under normal use, maintenance and service without charge for parts and labor, at any authorized BRP Distributor/Dealer during the warranty coverage period under the conditions described herein. No claim of breach of warranty shall be cause for cancellation or rescission of the sale of the Product to the owner. You may have other legal rights which may vary from country to country.

In the event that service is required outside of the country of original sale, or for EEA residents if service is required outside of the EEA, the owner will bear responsibility for any additional charges due to local practices and conditions, such as, but not limited to, freight, insurance, taxes, license fees, import duties, and any and all other financial charges, including those levied by governments, states, territories and their respective agencies.

BRP reserves the right to improve or modify products from time to time without assuming any obligation to modify products previously manufactured.

9) Transfer

If the ownership of a Product is transferred during the warranty coverage period, this limited warranty, subject to its terms and conditions, shall also be transferred and be valid for the remaining coverage period provided BRP or an authorized Product Distributor/Dealer receives a proof that the former owner agreed to the transfer of ownership, in addition to the coordinates of the new owner.

10) Consumer Assistance

In the event of a controversy or a dispute in connection with this limited warranty, BRP suggests that you try to resolve the issue at the dealership level. We recommend discussing the issue with the authorized Distributor/Dealer's service manager or owner.

If the matter still remains unresolved, contact BRP by filling out the customer contact form at **www.brp.com** or contact BRP by mail at one of the addresses listed under the *Contact Us* section of this guide.

NOTES

9 CUSTOMER INFORMATION - TABLE OF CONTENTS

DATA PRIVACY INFORMATION. 9-2

CONTACT US. 9-6

Asia Pacific. 9-6

Europe, Middle East and Africa 9-6

Latin America 9-7

North America 9-7

CHANGE OF ADDRESS AND OWNERSHIP 9-8

DATA PRIVACY INFORMATION

DATA PRIVACY INFORMATION

Bombardier Recreational Products Inc., its affiliates and subsidiaries (“BRP”) is committed to protecting your privacy. This notice is to inform you about how we collect, use and disclose your personal information in the course of managing our relationship with you. More details can be found by visiting the BRP’s Privacy Policy website.

https://brp.com/en/privacy-policy.html

Please be assured that we have appropriate measures in place to ensure that your personal information is kept secured and protected against unauthorized access, use or disclosure.

The personal information we hold about you is collected either directly from you or through our authorized dealers and third parties (e.g. with whom we offer services or engage in joint-marketing activities), and includes:

- Contact, Demographic & Registration Information (e.g., name, full address, phone number, email, ownership history, language of communication)
- Transactional Information (e.g., information necessary to handle returns, payment information when you purchase our products or services through our websites or mobile applications and other issues related to your purchase of BRP products).
- Vehicle Information (e.g., serial number, vehicle identification number, mileage, purchase and delivery date, unit usage, vehicle location and movements)
- Your comments, opinions and reviews of our products and services
- Information collected automatically when you navigate on BRP or dealer's websites or mobile apps collected via cookies and similar technologies (e.g., IP address, type of device, operating system, browser type, webpages you view).

We may also receive information about you from social media platforms when you interact with us on those platforms.

We use your personal information for various reasons, mostly to:

- Manage your order of BRP products and services (e.g., to complete or deliver your order, or service your BRP product)
- Provide customer support, assistance, and after-sales (e.g., complete or follow up with you about your order or maintenance, help with any delivery issues, handle returns, and other issues related to your purchase of BRP products)
- Manage your BRP products registration, warranty, security, safety recall, and dispute resolution (e.g. to offer warranty and after-sales service to you, protect your security and safety, perform safety recalls)
- Send you commercial communications about our products and services (e.g. inform you about new BRP products, services or features; share news about contests, promotions, and events or discuss products or services offered by BRP that may be of interest to you)
- Offer you personalized experience, content, or offers and services based on profiling or geolocation technologies (e.g. to notify you when your vehicle may need servicing, to locate your nearest dealership)
- Perform data analytics and statistics data that no longer identifies you personally, for business intelligence and have insights on how to improve our products and services
- Prevent, detect, and control fraud and any unauthorized or illegal activities (e.g., to detect and control fraud in relation to BRP products or services purchase; manage illegal or unauthorized activities and cyberthreats)
- Comply with applicable laws and regulations.

Your personal information may be disclosed to the following: BRP, BRP's authorized dealerships, distributors, service providers, advertising & market research partners and other authorized third parties.

Depending on the circumstances, your personal information may be communicated outside the region where you reside. Your personal information is retained only for as long as necessary for the purpose for which we obtained it and according to our retention policies.

To exercise your data privacy rights (e.g. right of access, right of rectification), to withdraw your consent in order to be removed from the address list for marketing purposes or for the satisfaction survey or for general data privacy questions, please contact BRP's Data Protection Officer at or by mail at privacyofficer@brp.com or by mail at: BRP Legal Service, 726 St-Joseph, Valcourt, Quebec, Canada, J0E 2L0.

When BRP processes your personal information, they do so in compliance with its Privacy Policy available at:

https://brp.com/en/privacy-policy.html

CONTACT US

www.brp.com

Asia Pacific

BRP Asia
107D and 107E, 17/F, Tower 1,
Grand Century Place, Mongkok,
Kowloon, Hong Kong

Australia
Level 26
477 Pitt Street
Sydney, NSW 2020

China
上海市徐汇区衡山路10号6号楼301
Rm 301, Building 6,
No.10 Heng Shan Rd,
Shanghai, China

Japan
21F Shinagawa East One Tower
2–16–1 Konan, Minato-ku-ku,
Tokyo 108–0075

Europe, Middle East and Africa

Belgium
Oktrooiplein 1
9000 Gent

Czech Republic
Stefanikova 43a
Prague 5
150 00

Germany
Alte Papierfabrik 16
D-40699 Erkrath

Finland
Isoaavantie 7
PL 8040
96101 Rovaniemi

France
Arteparc Bâtiment B
Route de la côte d'Azur, Le Canet
13 590 Meyreuil

Norway
Ingvald Ystgaards veg 15
N-7484 Trondheim

Sweden
Spinnvägen 15
903 61 Umeå

Switzerland
Avenue d'Ouchy 4-6
1006 Lausanne

Latin America

Brazil
Rua Odila Maia Rocha Brito, 25
Edificio Beaumont, andar 1 ao 5
CEP 13092-110 Campinas -SP

Mexico
Av. Ferrocarril 202
Parque Industrial Querétaro
Santo Rosa Jauregui, Querétaro
C.P. 76220

North America

Canada
3200A, rue King Ouest,
Suite 300
Sherbrooke (Québec) J1L 1C9

United States of America
10101 Science Drive
Sturtevant, Wisconsin
53177

CHANGE OF ADDRESS AND OWNERSHIP

If your address has changed or if you are the new owner of the vehicle, be sure to notify BRP by either:

- Notifying an authorized Can-Am dealer.
- **North America Only:** calling at 1 888 272-9222.
- Mailing one of the change of address cards on the following pages at one of the BRP addresses indicated in the *Contact Us* section of this guide.

In case of change of ownership, please join a proof that the former owner agreed to the transfer.

Notifying BRP, even after the expiration of the limited warranty, is very important as it enables BRP to reach the vehicle owner if necessary, like when safety recalls are initiated. It is the owner's responsibility to notify BRP.

STOLEN UNITS: If your personal vehicle is stolen, you should notify BRP or an authorized Can-Am dealer. We will ask you to provide your name, address, phone number, the vehicle identification number and the date it was stolen.

This page is
intentionally blank

CHANGE OF ADDRESS ❑ CHANGE OF OWNERSHIP ❑

VEHICLE IDENTIFICATION NUMBER

Model Number | Vehicle Identification Number (V.I.N.)

OLD ADDRESS OR PREVIOUS OWNER:

NAME

NO. STREET APT

CITY STATE/PROVINCE ZIP/POSTAL CODE

COUNTRY TELEPHONE

NEW ADDRESS OR NEW OWNER:

NAME

NO. STREET APT

CITY STATE/PROVINCE ZIP/POSTAL CODE

COUNTRY TELEPHONE

E-MAIL ADDRESS

CHANGE OF ADDRESS ❑ CHANGE OF OWNERSHIP ❑

VEHICLE IDENTIFICATION NUMBER

Model Number | Vehicle Identification Number (V.I.N.)

OLD ADDRESS OR PREVIOUS OWNER:

NAME

NO. STREET APT

CITY STATE/PROVINCE ZIP/POSTAL CODE

COUNTRY TELEPHONE

NEW ADDRESS OR NEW OWNER:

NAME

NO. STREET APT

CITY STATE/PROVINCE ZIP/POSTAL CODE

COUNTRY TELEPHONE

E-MAIL ADDRESS

This page is
intentionally blank

CHANGE OF ADDRESS ❑ CHANGE OF OWNERSHIP ❑

VEHICLE IDENTIFICATION NUMBER

Model Number | Vehicle Identification Number (V.I.N.)

OLD ADDRESS OR PREVIOUS OWNER:

NAME

NO. STREET APT

CITY STATE/PROVINCE ZIP/POSTAL CODE

COUNTRY TELEPHONE

NEW ADDRESS OR NEW OWNER:

NAME

NO. STREET APT

CITY STATE/PROVINCE ZIP/POSTAL CODE

COUNTRY TELEPHONE

E-MAIL ADDRESS

CHANGE OF ADDRESS ❑ CHANGE OF OWNERSHIP ❑

VEHICLE IDENTIFICATION NUMBER

Model Number | Vehicle Identification Number (V.I.N.)

OLD ADDRESS OR PREVIOUS OWNER:

NAME

NO. STREET APT

CITY STATE/PROVINCE ZIP/POSTAL CODE

COUNTRY TELEPHONE

NEW ADDRESS OR NEW OWNER:

NAME

NO. STREET APT

CITY STATE/PROVINCE ZIP/POSTAL CODE

COUNTRY TELEPHONE

E-MAIL ADDRESS

NOTES

NOTES

NOTES

NOTES

NOTES

NOTES

NOTES

NOTES

Model No. _____

VEHICLE
IDENTIFICATION NUMBER (V.I.N.) _____

ENGINE
IDENTIFICATION NUMBER (E.I.N.) _____

Owner: _____
NAME

_____
No. STREET APT

_____
CITY STATE/PROVINCE ZIP/POSTAL CODE

Purchase Date _____ | _____ | _____ | _____ | _____
YEAR MONTH DAY

Warranty Expiry Date _____ | _____ | _____ | _____ | _____
YEAR MONTH DAY

To be completed by the dealer at the time of the sale.

DEALER IMPRINT AREA

WARNING

TO REDUCE RISK OF SERIOUS INJURY OR DEATH,
- Read this operator's guide and safety labels.
- Watch the safety video.

BE PREPARED
- Fasten seat belts and make sure neets and/or doors are securely latched in place.
- Wear an approproved helmet and protective gear.
- Each rider must be able to sit with back against seat, foot flat on the floor or on the footrest, and hands on steering wheel or handholds. Stay completely inside the vehicle.

DRIVE RESPONSIBLY
- Avoid loss of control and rollovers.
- Avoid abrupt maneuvers, sideways sliding, skidding or fishtailing and never do donuts.
- Avoid hard acceleration when turning, even from a stop.
- Slow down before entering a turn.
- Plan for hills, rough terrain, ruts and other changes in traction and terrain.
- Avoid paved surfaces.
- Avoid side hilling (riding across slopes).

BE QUALIFIED AND RESPONSIBLE
- Do not allow careless or reckless driving.
- Driver must be at least 16 years old with a valid driver's license.
- Do not operate after using drugs or alcohol.
- Do not allow operation on public roads (unless designated for off-highway vehicle access where collisions with cars and trucks can occur.
- Do not exceed vehicle seating capacity.

219002492 REV1